MOUNTING AND OPERATING INSTRUCTIONS

EB 8484-1 EN

Translation of original instructions



TROVIS 3730-1 Electropneumatic Positioner

HV 2.00.xx · SV 3.01.xx

CE EAC Ex certified

Edition October 2026

Note on these mounting and operating instructions

These mounting and operating instructions assist you in mounting and operating the device safely. The instructions are binding for handling SAMSON devices. The images shown in these instructions are for illustration purposes only. The actual product may vary.

➔ For the safe and proper use of these instructions, read them carefully and keep them for later reference.

➔ If you have any questions about these instructions, contact SAMSON's After-sales Service Department (aftersalesservice@samsongroup.com).

Documents relating to the device, such as the mounting and operating instructions, are available on our website at ***www.samsongroup.com > Downloads > Documentation***.

Definition of signal words

⚠ DANGER

Hazardous situations which, if not avoided, will result in death or serious injury

⚠ WARNING

Hazardous situations which, if not avoided, could result in death or serious injury

NOTICE

Property damage message or malfunction

Note

Additional information

Tip

Recommended action

1 Safety instructions and measures 1-1
1.1 Notes on possible severe personal injury 1-3
1.2 Notes on possible personal injury 1-4
1.3 Notes on possible property damage 1-4
1.4 Special instructions concerning explosion protection 1-5
1.5 Warnings on the device 1-6
2 Markings on the device 2-1
2.1 Nameplate 2-1
2.2 Options 2-1
2.3 Article code 2-2
2.4 Firmware versions 2-3
2.5 Hardware versions 2-3
3 Design and principle of operation 3-1
3.1 Options 3-2
3.2 Mounting versions 3-2
3.3 Configuration using the TROVIS-VIEW software 3-3
3.4 Technical data 3-4
3.5 Dimensions in mm 3-10
3.6 Fixing levels according to VDI/VDE 3845 (September 2010) 3-14
4 Shipment and on-site transport 4-1
4.1 Accepting the delivered goods 4-1
4.2 Removing the packaging from the positioner 4-1
4.3 Transporting the positioner 4-1
4.4 Storing the positioner 4-1
5 Installation 5-1
5.1 Installation conditions 5-1
5.2 Preparation for installation 5-2
5.3 Turning the positioner shaft 5-2
5.4 Adjusting the lever and pin position 5-2
5.4.1 Travel tables 5-4
5.5 Positioner attachment 5-6
5.5.1 Direct attachment 5-6
5.5.2 Attachment according to IEC 60534-6 5-8
5.5.3 Attachment to Type 3510 Micro-flow Valve 5-12
5.5.4 Attachment according to VDI/VDE 3847-1 5-12
5.5.5 Attachment according to VDI/VDE 3847-2 5-19
5.5.6 Attachment according to VDI/VDE 3845 5-26

5.5.7 Reversing amplifier for double-acting actuators 5-30
5.5.8 Attaching positioners with stainless steel housings 5-30
5.5.9 Air purging function for single-acting actuators 5-31
5.6 Establishing pneumatic connections 5-32
5.6.1 Supply air 5-33
5.6.2 Signal pressure connection 5-33
5.6.3 Output pressure display 5-33
5.6.4 Supply pressure 5-34
5.7 Establishing electrical connections 5-34
5.7.1 Cable entry with cable gland 5-35
5.7.2 Electrical power 5-36
5.7.3 Switching amplifier according to EN 60947-5-6 5-36
5.8 Accessories 5-39

6 Operation 6-1
6.1 Rotary pushbutton 6-1
6.2 Volume restriction Q 6-2
6.3 Display 6-2

7 Start-up and configuration 7-1
7.1 Enabling configuration to change parameters 7-3
7.2 Saving parameters in a non-volatile memory 7-3
7.3 Entering the fail-safe position 7-4
7.4 Initializing the positioner 7-4
7.5 Other possible settings 7-7
7.5.1 Entering the pin position 7-7
7.5.2 Setting the nominal range 7-7
7.5.3 Selecting the characteristic 7-8
7.5.4 Entering the direction of action 7-9
7.5.5 Limiting the signal pressure 7-10
7.6 Adjusting the switching points of the optional limit contacts 7-10
7.6.1 Adjusting the CLOSED position 7-11
7.6.2 Adjusting the OPEN position 7-11

8 Operation 8-1
8.1 Adjusting the volume restriction Q 8-1
8.2 Changing the reading direction of the display 8-2
8.3 Changing operating mode 8-2
8.3.1 Closed-loop operation (automatic mode) 8-2
8.3.2 Manual mode 8-3

8.4 Performing zero calibration 8-4
8.5 Resetting the positioner....8-5
8.6 Restarting the positioner (boot)....8-6
9 Malfunctions 9-1
9.1 Troubleshooting 9-2
9.1.1 Clearing error codes 9-5
9.2 Emergency action 9-6
10 Servicing....10-1
10.1 Cleaning the cover window....10-1
10.2 Firmware updates 10-2
10.3 Periodic inspection and testing of the positioner....10-2
11 Decommissioning 11-1
12 Removal 12-1
13 Repairs 13-1
13.1 Servicing explosion-protected devices....13-1
13.2 Returning devices to SAMSON 13-1
14 Disposal....14-1
15 Certificates....15-1
16 Appendix A (configuration instructions) 16-1
16.1 Code list....16-1
16.2 Valve characteristic selection....16-6
17 Appendix B....17-1
17.1 After-sales service....17-1

1 Safety instructions and measures

Intended use

The SAMSON TROVIS 3730-1 Positioner is mounted on pneumatic control valves and used to assign the valve position to the control signal. The device is designed to operate under exactly defined conditions (e.g. operating pressure, temperature). Therefore, operators must ensure that the positioner is only used in applications where the operating conditions correspond to the technical data. In case operators intend to use the positioner in applications or conditions other than those specified, contact SAMSON.

SAMSON does not assume any liability for damage resulting from the failure to use the device for its intended purpose or for damage caused by external forces or any other external factors.

➔ Refer to the technical data for limits and fields of application as well as possible uses.

Reasonably foreseeable misuse

The TROVIS 3730-1 Positioner is ***not*** suitable for the following applications:

– Use outside the limits defined during sizing and by the technical data

Furthermore, the following activities do not comply with the intended use:

– Use of non-original spare parts
– Performing maintenance activities not described in these instructions

Qualifications of operating personnel

The positioner must be mounted, started up and serviced by fully trained and qualified personnel only; the accepted industry codes and practices must be observed. According to these mounting and operating instructions, trained personnel refers to individuals who are able to judge the work they are assigned to and recognize possible hazards due to their specialized training, their knowledge and experience as well as their knowledge of the applicable standards.

Explosion-protected versions of this device must be operated only by personnel who has undergone special training or instructions or who is authorized to work on explosion-protected devices in hazardous areas.

Personal protective equipment

No personal protective equipment is required for the direct handling of the positioner. Work on the control valve may be necessary when mounting or removing the device.

➔ Observe the requirements for personal protective equipment specified in the valve documentation.

➔ Check with the plant operator for details on further protective equipment.

Revisions and other modifications

Revisions, conversions or other modifications of the product are not authorized by SAMSON. They are performed at the user's own risk and may lead to safety hazards, for example. Furthermore, the product may no longer meet the requirements for its intended use.

Safety features

Upon failure of the air supply and/or electrical signal, the positioner vents the actuator, causing the valve to move to the fail-safe position determined by the actuator.

Warning against residual hazards

The positioner has direct influence on the control valve. To avoid personal injury or property damage, plant operators and operating personnel must prevent hazards that could be caused in the control valve by the process medium, the operating pressure, the signal pressure or by moving parts by taking appropriate precautions. Plant operators and operating personnel must observe all hazard statements, warnings and caution notes in these mounting and operating instructions, especially for installation, start-up and service work.

If inadmissible motions or forces are produced in the pneumatic actuator as a result of the supply pressure, it must be restricted using a suitable supply pressure reducing station.

Responsibilities of the operator

Operators are responsible for proper use and compliance with the safety regulations. Operators are obliged to provide these mounting and operating instructions to the operating personnel and to instruct them in proper operation. Furthermore, operators must ensure that operating personnel or third parties are not exposed to any danger.

Responsibilities of operating personnel

Operating personnel must read and understand these mounting and operating instructions as well as the specified hazard statements, warnings and caution notes. Furthermore, the operating personnel must be familiar with the applicable health, safety and accident prevention regulations and comply with them.

Referenced standards, directives and regulations

Devices with a CE marking fulfill the requirements of the following Directives:

– TROVIS 3730-1: 2011/65/EU, 2014/30/EU
– TROVIS 3730-1-110/-510/-810/-850: 2011/65/EU, 2014/30/EU, 2014/34/EU

Devices with an EAC marking fulfill the following requirements of the Regulations:

– TROVIS 3730-1: TR CU 020/2011
– TROVIS 3730-1-113/-513: TR CU 020/2011, TR CU 020/2011

➔ See Appendix for declarations of conformity and certificates.

Referenced documents

The following documents apply in addition to these mounting and operating instructions:

– The mounting and operating instructions of the components on which the positioner is mounted (valve, actuator, valve accessories etc.).

1.1 Notes on possible severe personal injury

⚠ DANGER

Risk of fatal injury due to the ignition of an explosive atmosphere.

Incorrect installation, operation or maintenance of the positioner in potentially explosive atmospheres may lead to ignition of the atmosphere and ultimately to death.

➔ The following regulations apply to installation in hazardous areas: EN 60079-14 (VDE 0165, Part 1).

➔ Installation, operation or maintenance of the positioner is to be performed only by personnel who has undergone special training or instructions or who is authorized to work on explosion-protected devices in hazardous areas.

1.2 Notes on possible personal injury

⚠ WARNING

Risk of personal injury due to moving parts on the valve.

During initialization of the positioner and during operation, the valve moves through its entire travel range. Crush injuries to hands or fingers may occur if they are inserted into the valve.

➔ During initialization, do not insert hands or fingers into the valve yoke and do not touch any moving valve parts.

Sudden loud noise when the pneumatic actuator vents.

The positioner mounted on the control valve can cause the pneumatic actuator to vent. A loud noise may occur during venting. This can cause hearing damage.

➔ Wear hearing protection when working near the valve.

1.3 Notes on possible property damage

NOTICE

Risk of damage to the positioner due to incorrect mounting position.

➔ Do not mount the positioner with the back of the device facing upward.

➔ Do not seal or restrict the vent opening when the device is installed on site.

An incorrect electric signal will damage the positioner.

A current source must be used to power the positioner.

➔ Only use a current source and never a voltage source.

Incorrect assignment of the terminals will damage the positioner and will lead to malfunction.

The prescribed terminal assignment must be observed for the positioner to function properly.

➔ Connect the electrical wiring to the positioner according to the prescribed terminal assignment.

Malfunction due to initialization not yet completed.

The initialization causes the positioner to be calibrated to adapt it to the mounting situation. After initialization is completed, the positioner is ready for use.

➔ Initialize the positioner on first start-up.

➔ Re-initialize positioner after changing the mounting position.

Risk of positioner damage due to incorrect grounding of the electric welding equipment.

➔ Do not ground electric welding equipment near the positioner.

1.4 Special instructions concerning explosion protection

If a part of the device on which the explosion protection is based needs to be serviced, the device must not be put back into operation until a qualified inspector has assessed it according to explosion protection requirements, has issued an inspection certificate, or given the device a mark of conformity. Inspection by a qualified inspector is not required if the manufacturer performs a routine test on the device before putting it back into operation and the passing of the routine test is documented by attaching a mark of conformity to the device. Replace explosion-protected components only with original, routine-tested components by the manufacturer.

Devices that have already been operated outside hazardous areas and are intended for future use inside hazardous areas must comply with the safety requirements placed on serviced devices. Before being operated inside hazardous areas, test the devices according to the specifications for servicing explosion-protected devices.

Maintenance, calibration and work on equipment

➔ Only use intrinsically safe current/voltage calibrators and measuring instruments for interconnection with intrinsically safe circuits to check or calibrate the equipment inside or outside hazardous areas.

➔ Observe the maximum permissible values specified in the certificates for intrinsically safe circuits.

Equipment with type of protection Ex nA/Ex ec

➔ In equipment operated with type of protection Ex nA/Ex ec (non-sparking equipment), only connect, isolate or switch circuits while energized during installation, maintenance or repair.

➔ Use certified cable glands and blanking plugs with appropriate type of protection and IP rating ≥6X, which are suitable for the certified temperature range.

➔ Connect the signal circuit using screw terminals (terminal 11/12) for electrical conductors with a wire cross-section from 0.2 to 2.5 mm². The tightening torque is 0.5 to 0.6 Nm.

Equipment with type of protection Ex t

➔ In equipment operated with type of protection Ex t (protection by enclosure), only connect, isolate or switch circuits while energized during installation, maintenance or repair.

➔ While working on the device during operation in potentially explosive dust atmospheres, be aware that opening the housing cover may cause the explosion protection to become ineffective.

➔ Use certified cable glands and blanking plugs with appropriate type of protection and IP rating ≥6X, which are suitable for the certified temperature range.

➔ To connect the signal circuit, use screw terminals (terminal 11/12) for electrical conductors with a wire cross-section from 0.2 to 2.5 mm². The tightening torque is 0.5 to 0.6 Nm.

1.5 Warnings on the device

Warning symbols	Meaning of the warning
	Warning against sudden loud noise The positioner mounted on the control valve can cause the pneumatic actuator to vent. A loud noise may occur during venting. This can cause hearing damage.

2 Markings on the device

2.1 Nameplate

The nameplates shown were up to date at the time of publication of this document. The nameplate on the device may differ from the one shown.

Explosion-protected version

SAMSON TROVIS 3730-1 13
Positioner
Supply max. 1
Input 3
2
* See EU Type Exam. Certificate for further values
-40 °C ≤ T_a* ≤ +55 °C
Date 6
SAM 7 HV 8 SV 9
Mat. 10 S/N 11
Model 3730-1- 12
SAMSON AG D-60314 Frankfurt Made in Germany

Version without explosion protection

SAMSON TROVIS 3730-1 13
Positioner
Supply max. 1
Input 3
See technical data for ambient temperature
SAM 7 HV 8 FV 9
Mat. 10 Date 6
S/N 11
Model 3730-1- 12
SAMSON AG D-60314 Frankfurt Made in Germany

1 Supply pressure
2 Explosion protection marking
3 Input signal
6 Year of manufacture
7 Code for NAMUR Recommendation NE 53 (internal specification)
8 Hardware version
9 Firmware/software version
10 Material number
11 Serial number
12 Article code
13 Conformity

2.2 Options

If option modules are installed in the TROVIS 3730-1 Positioner, a label to identify the module is affixed to the device:

SAMSON TROVIS 3730-1 Option module
1

1 Option's function

2.3 Article code

Positioner	TROVIS 3730-1-	x	x	x	0	x	x	0	x	x	x	x	x	x	1	0	x	9	9	9	8
With LCD and autotune																					
Explosion protection																					
Without		0	0	0																	
ATEX, IECEx, ... (see Chapter 3.4)		x	x	x																	
Option 1																					
Without					0																
Position transmitter 4 to 20 mA					1																
Option 2																					
Without						0															
2x software limit contacts (PLC)		0	0	0		1															
2x software limit contacts (NAMUR) [1]		x	x	x		2															
2x inductive limit contacts (NAMUR)						4															
Electrical connection																					
2x M20x1.5 (1x cable gland, 1x blanking plug)								1													
Body material																					
Aluminum EN AC-44300DF (standard)									0												
Stainless steel 1.4408									1												
Cover																					
With round window										1											
Without window										2											
Housing version																					
Standard												0	0								
With additional vent hole and VDI/VDE 3847 adapter; without travel pick-off parts												2	0								
With additional vent hole												2	1								
Additional certification																					
SIL															1						
Permissible ambient temperature																					
Standard: –20 to +85 °C																	0				
–40 to +85 °C metal cable gland																	1				
–55 to +85 °C, low-temperature version with metal cable gland																	2				

Positioner	TROVIS 3730-1- x x x 0 x x 0 x x x x x x 1 0 x 9 9 9 8
Hardware version	
1.00.00	9 9 9 8
2.00.00	9 8 9 7
Firmware version	
3.00.04	9 9 9 8
3.01.00	9 8 9 7

1) Only for versions with explosion protection

2.4 Firmware versions

Firmware revisions	
Old	**New**
3.00.04	3.01.00
	NOM initialization possible for rotary actuators
	Setting of dead band (integral-action component)
	Compatibility with SAM VALVE MANAGEMENT
	Detection of actuators that are too weak

2.5 Hardware versions

Hardware revisions	
Old	**New**
1.00.00	2.00.00
	Volume restriction (additional equipment) removed. Instead, standard integration of the adjustable volume restriction Q (see Chapter 6.2)

3 Design and principle of operation

➔ See Fig. 3-1

The TROVIS 3730-1 Electropneumatic Positioner is mounted on pneumatic control valves and used to assign the valve position (controlled variable x) to the control signal (set point w). The positioner compares the electric control signal of a control system to the travel or opening angle of the control valve and issues a signal pressure for the pneumatic actuator.

The positioner mainly consists of a non-contact travel sensor system (2), pneumatics and the electronics with the microcontroller (4). The valve position is transmitted either as an angle of rotation or linear travel to the pick-up lever, from there to the travel sensor (2) and forwarded to the microcontroller (4). The PID algorithm in the microcontroller compares the valve position measured by the travel sensor (2) to the 4 to 20 mA DC control signal issued by the control system after it has been converted by the A/D converter (3).

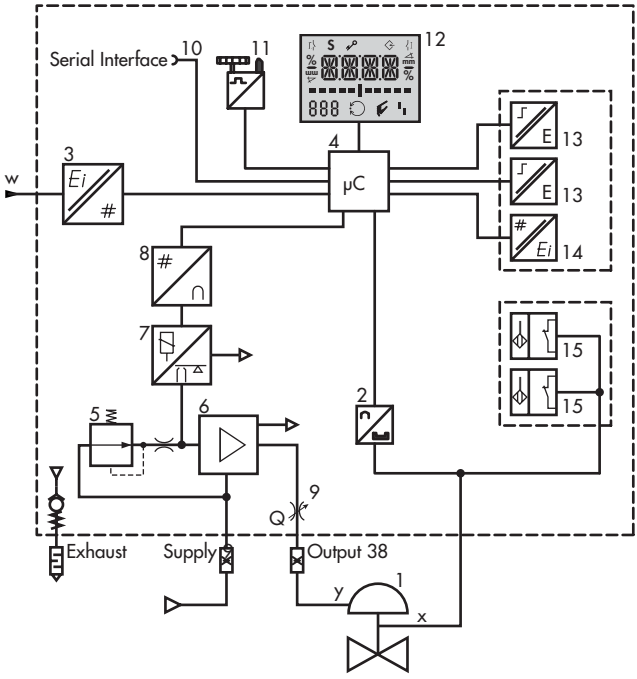

1 Control valve
2 Travel sensor
3 A/D converter
4 Microcontroller
5 Pressure reducer
6 Air capacity booster
7 i/p converter
8 D/A converter
9 Volume restriction Q
10 Communication interface
11 Rotary pushbutton
12 Display
13 [1] Software limit contact (PLC/NAMUR)
14 [1] Position transmitter
15 [1] Inductive limit contacts (NAMUR)

[1] Optional

Fig. 3-1: *Block diagram*

In case of a set point deviation, the activation of the i/p converter (7) is changed so that the actuator of the control valve (1) is pressurized or vented accordingly over the downstream air capacity booster (6). As a result, the closure member of the valve (e.g. plug) is moved to the position determined by the set point.

The positioner is operated by a rotary pushbutton (9) for menu navigation on the display (11).

3.1 Options

The optional additional functions of the TROVIS 3730-1 Positioner allows it to be adapted to specific requirements.

Inductive limit contacts

Limit contacts with mechanical position pick-up issue a signal to a control system when the valve reaches one of the two adjustable limits.

Inductive proximity switches are operated by adjustable tags. The operation of the inductive limit contacts requires switching amplifiers to be connected in the output circuit.

Software limit contacts

The software limit contacts signalize that the valve has reached one of the two adjustable limits.

– When limit 1 is not reached
– When limit 2 is exceeded

The following versions are available:

– Connection of a PLC according to IEC 61131-2, P_{max} = 400 mW
– Connection to NAMUR switching amplifier acc. to EN 60947-5-6

Position transmitter

The position transmitter is a two-wire transmitter and issues the travel sensor signal (4 to 20 mA) processed by the microcontroller. This signal is issued independent of the positioner's input signal. Additionally, the position transmitter allows positioner faults to be indicated over a signal current of 2.4 mA or 21.6 mA.

3.2 Mounting versions

The TROVIS 3730-1 Positioner is suitable for the following types of attachment using the corresponding accessories (see the 'Installation' chapter):

– **Direct attachment to Type 3277 Actuator**
  The positioner is mounted on the yoke. The signal pressure is connected to the actuator over a connection block: internally over a hole in the valve yoke for "actuator stem extends" fail-safe action and through an external signal pressure line for "actuator stem retracts" fail-safe action.
– **Attachment to actuators according to IEC 60534-6:**
  The positioner is mounted to the control valve using a NAMUR bracket.

- **Attachment according to VDI/ VDE 3847-1/-2:**
  Attachment according to VDI/ VDE 3847-1/-2 using the corresponding accessories allows the positioner to be replaced quickly while the process is running.
- **Attachment to Type 3510 Micro-flow Valve**
  The positioner is attached to the valve yoke using a bracket.
- **Attachment to rotary actuators according to VDI/VDE 3845:**
  The positioner is mounted to the rotary actuator using the corresponding accessories.

3.3 Configuration using the TROVIS-VIEW software

The positioner can be configured with SAMSON's TROVIS-VIEW Software (version 4). For this purpose, the positioner has a digital interface (**SAMSON SERIAL INTERFACE**, **SSP**) to allow the USB port of a computer to be connected to it using an adapter cable.

The TROVIS-VIEW software enables the user to easily configure the positioner as well as view process parameters online.

i ***Note***

TROVIS-VIEW provides a uniform user interface that allows users to configure and parameterize various SAMSON devices using device-specific database modules. The 3730-1 device module can be downloaded free of charge from our website at ▶ www.samsongroup.com > Downloads > Software & Drivers > TROVIS-VIEW. Further information on TROVIS-VIEW (e.g. system requirements) is available on our website and in the Data Sheet ▶ T 6661 .

3.4 Technical data

Table 3-1: *TROVIS 3730-1 Electropneumatic Positioner*

Travel		
Adjustable travel for	Direct attachment to Type 3277: Attachment according to IEC 60534-6 (NAMUR): Attachment according to VDI/VDE 3847 Attachment to rotary actuators:	3.5 to 30 mm 3.5 to 300 mm 3.5 to 300 mm 22 to 100°
Travel range	Adjustable within the initialized travel/angle of rotation of the valve; travel can be restricted to 1/5 at the maximum.	
Set point w		
Signal range	4 to 20 mA · Two-wire device, reverse polarity protection Split-range operation: 4 to 11.9 mA and 12.1 to 20 mA	
Static destruction limit	±33 V	
Minimum current	3.6 mA for display · 3.8 mA for operation	
Load impedance	No explosion protection: ≤6.6 V (corresponding to 330 Ω at 20 mA) Explosion protection: ≤7.3 V (corresponding to 365 Ω at 20 mA)	
Supply		
Supply air	1.4 to 7 bar (20 to 105 psi)	
Air quality acc. to ISO 8573-1	Max. particle size and density: Oil content: Pressure dew point:	Class 4 Class 3 Class 3 or at least 10 K below the lowest ambient temperature to be expected
Signal pressure (output)	0 bar up to the supply pressure · Can be limited to 2.4 bar ±0.2 bar by software	
Hysteresis	≤0.3 %	
Sensitivity	≤0.1 %	
Characteristic	Linear/equal percentage/reverse equal percentage/butterfly valve/rotary plug valve/segmented ball valve	
Direction of action	Reversible	
Air consumption, steady state	Average approx. 75 l_n/h	

Air output capacity (when Δp = 6 bar)	
Actuator (supply)	Unrestricted volume: 8.5 m_n^3/h · At Δp = 1.4 bar: 3.0 m_n^3/h · $K_{Vmax\ (20\ °C)}$ = 0.09 Restricted volume: Approx. 1/3 $K_{Vmax\ (20\ °C)}$
Actuator (exhaust)	Unrestricted volume: 14.0 m_n^3/h · At Δp = 1.4 bar: 4.5 m_n^3/h · $K_{Vmax\ (20\ °C)}$ = 0.15 Restricted volume: Approx. 1/3 $K_{Vmax\ (20\ °C)}$
Environmental conditions and permissible temperatures	
Permissible environmental conditions according to EN 60721-3	
Storage	1K6 (relative humidity ≤95 %)
Transport	2K4
Operation	4K4 –20 to +85 °C: All versions –40 to +85 °C: With metal cable glands –55 to +85 °C: Low-temperature versions with metal cable glands Observe the limits in the test certificate for explosion-protected versions.
Resistance to vibration	
Vibrations (sinusoidal)	According to DIN EN 60068-2-6: 0.15 mm, 10 to 60 Hz; 20 m/s^2, 60 to 500 Hz per axis 0.75 mm, 10 to 60 Hz; 100 m/s^2, 60 to 500 Hz per axis
Bumps (half sine)	According to DIN EN 60068-2-29: 150 m/s^2, 6 ms; 4000 bumps per axis
Noise	According to DIN EN 60068-2-64: 10 to 200 Hz: 1 $(m/s^2)^2/Hz$ 200 to 500 Hz: 0.3 $(m/s^2)^2/Hz$ 4 h/axis
Recommended continuous duty	≤20 m/s^2
Influences	
Temperature	≤0.15 %/10 K
Supply	None
Requirements	
EMC	Complying with EN 61000-6-2, EN 61000-6-3, EN 61326-1 and NAMUR Recommendation NE 21
Degree of protection	IP66/NEMA 4X

Electrical connections	
Cable glands	One M20x1.5 cable gland for 6 to 12 mm clamping range Second M20x1.5 threaded connection additionally available
Terminals	Screw terminals for 0.2 to 2.5 mm² wire cross-section
Explosion protection	
ATEX, IECEx, ...	See Table 3-3
Materials	
Housing and cover	Die-cast aluminum EN AC-AlSi12(Fe) (EN AC-44300) acc. to DIN EN 1706, chromate and powder coating · Special version: stainless steel 1.4408
Window	Makrolon® 2807
Cable glands	Polyamide, nickel-plated brass, stainless steel 1.4305
Other external parts	Stainless steel: 1.4571 and 1.4301
Weight	
	Aluminum housing: approx. 1.0 kg · Stainless steel housing: approx. 2.2 kg

Table 3-2: *Optional additional functions*

Position transmitter		
Version	Two-wire system, galvanic isolation, reverse polarity protection, reversible direction of action	
Supply	10 to 30 V DC	
Output signal	4 to 20 mA	
Operating range	2.4 to 21.6 mA	
Error indication	2.4 or 21.6 mA	
No-load current	1.4 mA	
Static destruction limit	38 V DC · 30 V AC	
Software limit contacts	**NAMUR**	**PLC**
Version	Galvanic isolation, reverse polarity protection, switching output acc. to EN 60947-5-6	Galvanic isolation, reverse polarity protection, binary input of a PLC acc. to EN 61131-2, P_{max} = 400 mW
Signal state	≤1.0 mA (non-conducting)	R = 25 kΩ (non-conducting)
	≥2.2 mA (conducting)	R = 348 Ω (conducting)
Static destruction limit	32 V DC/24 V AC	16 V DC/50 mA

Inductive limit contacts	
Version	For connection to switching amplifier according to EN 60947-5-6, SJ2-SN proximity switches, reverse polarity protection
Measuring plate not detected	≥3 mA
Measuring plate detected	≤1 mA
Static destruction limit	20 V DC
Permissible ambient temperature	–50 to +85 °C

Table 3-3: *Summary of explosion protection approvals*

		Certification			Type of protection
TROVIS 3730-1	-110	EU type examination certificate	Number Date	PTB 18 ATEX 2001 2018-10-25	II 2 G Ex ia IIC T4/T6 Gb II 2 D Ex ia IIIC T 85 °C Db
	-510	EU type examination certificate	Number Date	PTB 18 ATEX 2001 2018-10-25	II 2 D Ex tb IIIC T 85 °C Db
	-810	EU type examination certificate	Number Date	PTB 18 ATEX 2001 2018-10-25	II 3 G Ex nA IIC T4/T6 Gc II 2 D Ex tb IIIC T 85 °C Db
	-850	EU type examination certificate	Number Date	PTB 18 ATEX 2001 2018-10-25	II 3 G Ex nA IIC T4/T6 Gc
	-111	**IECEx**	Number Date	IECEx PTB 19.0010 2019-03-04	Ex ia IIC T4/T6 Gb Ex ia IIIC T85°C Db
	-511	**IECEx**	Number Date	IECEx PTB 19.0010 2019-03-04	Ex tb IIIC T85°C Db
	-811	**IECEx**	Number Date	IECEx PTB 19.0010 2019-03-04	Ex nA IIC T4/T6 Gc Ex tb IIIC T85°C Db
	-851	**IECEx**	Number Date	IECEx PTB 19.0010 2019-03-04	Ex nA IIC T4/T6 Gc
	-112	**CCC Ex**	Number Date Valid until	2020322307001506 2025-09-15 2030-09-14	Ex ia IIC T4/T6 Gb Ex ia IIIC T85 °C Db
	-512	**CCC Ex**	Number Date Valid until	2020322307001506 2025-09-15 2030-09-14	Ex tb IIIC T85 °C Db
	-113	**EAC Ex**	Number Date Valid until	EA3C KZ 7500525.01.01.02374 2026-01-20 2031-01-19	1Ex ia IIC T4/T6 Gb X Ex ia IIIC T85 °C Db X

		Certification			Type of protection
TROVIS 3730-1	-513	**EAC Ex**	Number Date Valid until	EA3C KZ 7500525.01.01.02374 2026-01-20 2031-01-19	Ex tb IIIC T85 °C Db X
	-130	**FM**	Number Date	FM21CA0063 2022-10-18	IS Cl. I, II, III, Div. 1, Gr. A–G; T* Ta*; IS Ex ia IIC T* Gb NI Class I, II, III Div. 2, Gr. A–G; T* Ta*; Type 4X; IP66
	-130	**FM**	Number Date	FM21US0096 2022-10-18	IS Cl. I, II, III, Div. 1, Gr. A–G; T* Ta* Type 4X NI Cl. I, II, III, Div. 2, Gr. A–G; T* Ta*Type 4X; Cl. I, Zone 1, AEx ia IIC; Type 4X
	-115	**INMETRO**	Number Date Valid until	IEx 20.0231/1 2024-01-11 2030-01-10	Ex ia IIC T4/T6 Gb Ex ia IIIC T85°C Db
	-515	**INMETRO**	Number Date Valid until	IEx 20.0231/1 2024-01-11 2030-01-10	Ex tb IIIC T85°C Db
	-815	**INMETRO**	Number Date Valid until	IEx 20.0231/1 2024-01-11 2030-01-10	Ex ec IIC T4/T6 Gc Ex tb IIIC T85°C Db
	-855	**INMETRO**	Number Date Valid until	IEx 20.0231/1 2024-01-11 2030-01-10	Ex ec IIC T6 Gc
	-170	**JIS**	Number Date Valid until	TC22938 2023-12-26 2026-12-25	Ex ia IIC T6 Gb
	-114	**KCS Korea**	Number Date Valid until	21-KA4BO-0728 2021-09-30 2026-09-30	Ex ia IIC T6/T4
	-112	**NEPSI**	Number Date Valid until	GYJ23.1091X 2023-04-29 2028-04-28	Ex ia IIC T4/T6 Gb Ex ia IIIC T85°C Db
	-512	**NEPSI**	Number Date Valid until	GYJ23.1091X 2023-04-29 2028-04-28	Ex tb IIIC T85°C Db

		Certification			Type of protection
TROVIS 3730-1		**TR CMU 1055**	Number Date	ZETC/027/2024 2024-04-22	Module D
	-116	**TR CMU 1055**	Number Date	ZETC/35/2021 2021-07-26	II 2G Ex ia IIC T4/T6 Gb II 2D Ex ia IIIC T85 °C Db
	-516	**TR CMU 1055**	Number Date	ZETC/35/2021 2021-07-26	II 2D Ex tb IIIC T85 °C Db
	-816	**TR CMU 1055**	Number Date	ZETC/35/2021 2021-07-26	II 3G Ex nA IIC T4/T6 Gc II 2D Ex tb IIIC T85 °C Db
	-856	**TR CMU 1055**	Number Date	ZETC/35/2021 2021-07-26	II 3G Ex nA IIC T4/T6 Gc

3.5 Dimensions in mm

Attachment according to IEC 60534-6

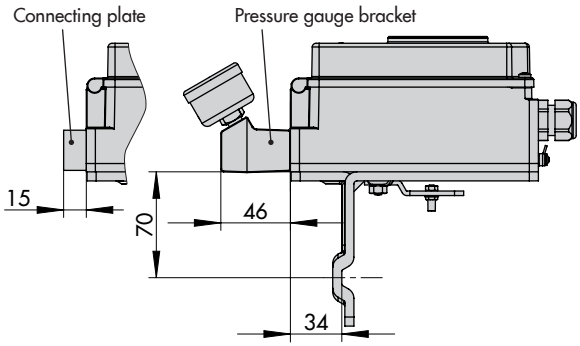

Direct attachment

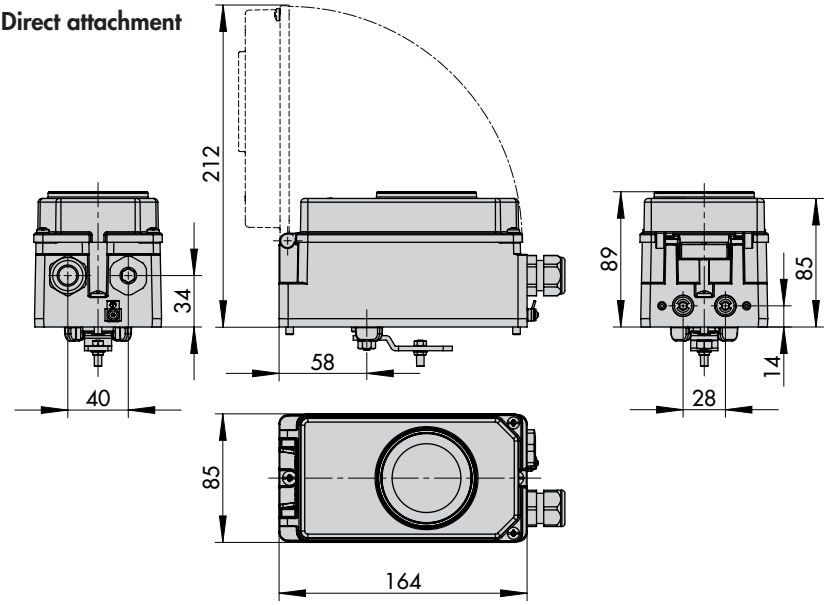

Attachment according to VDI/ VDE 3847-1 onto Type 3277 Actuator

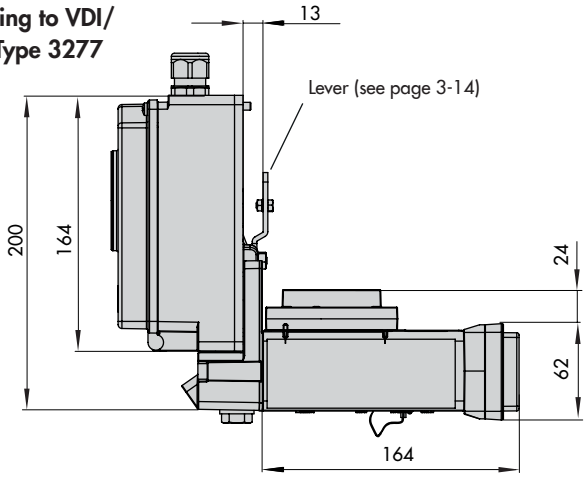

Attachment according to VDI/ VDE 3847 to a NAMUR rib

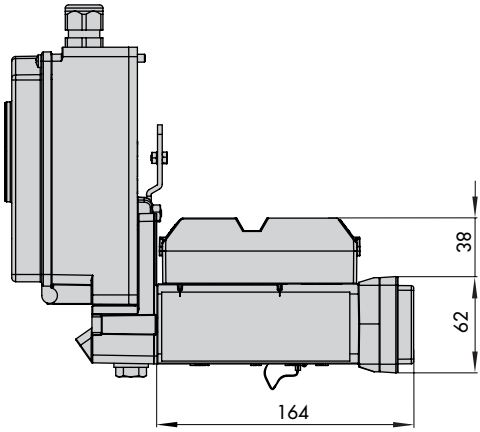

Attachment according to VDI/VDE 3847-2 with single-acting actuator

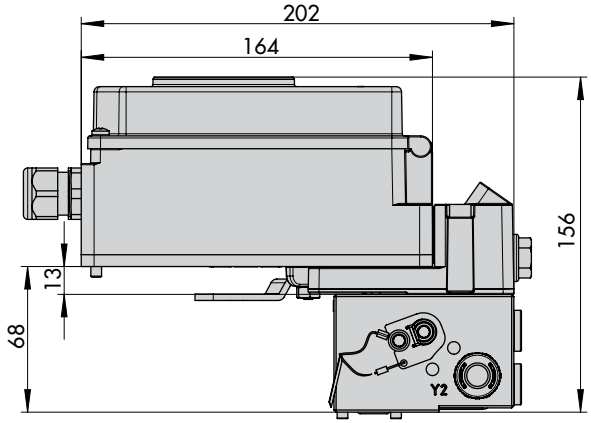

Attachment according to VDI/VDE 3847-2 with double-acting actuator

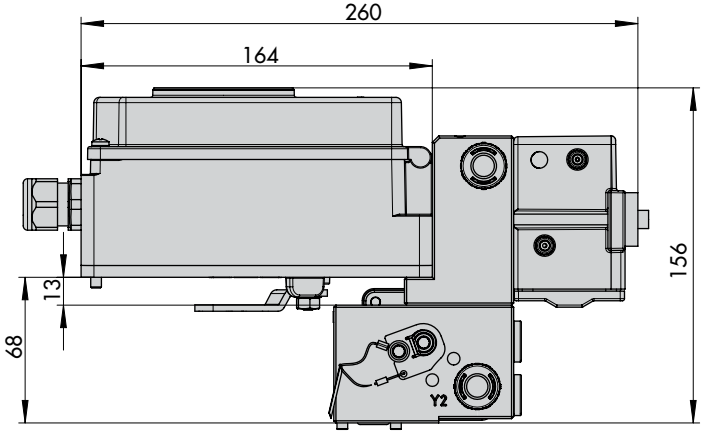

1) For attachment using intermediate plate

Attachment to rotary actuators according to VDI/VDE 3845

Heavy-duty version

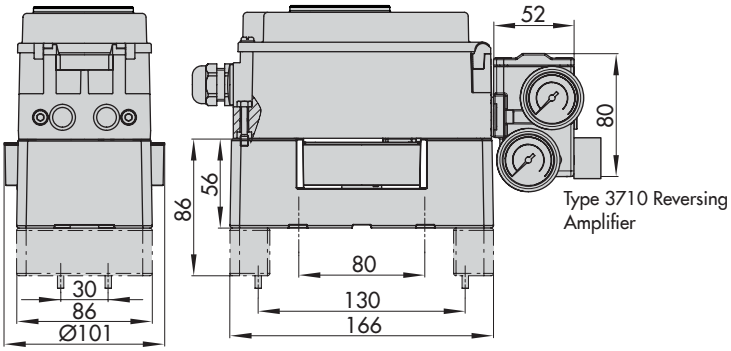

Light version

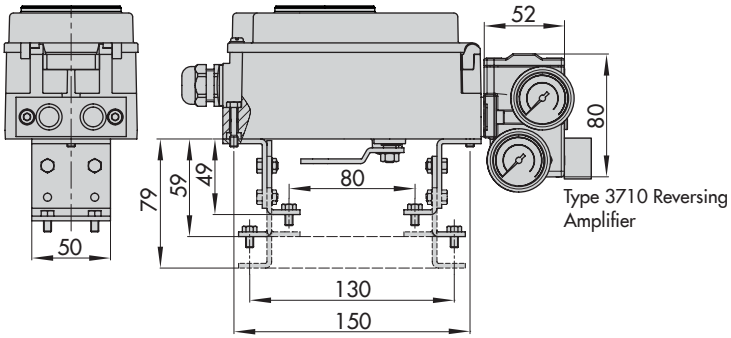

Lever

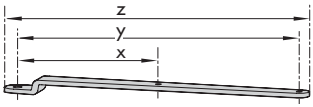

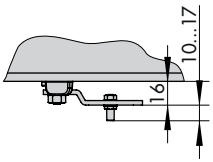

Lever	x	y	z
M	25 mm	50 mm	66 mm
L	70 mm	100 mm	116 mm
XL	100 mm	200 mm	216 mm
XXL	200 mm	300 mm	316 mm

3.6 Fixing levels according to VDI/VDE 3845 (September 2010)

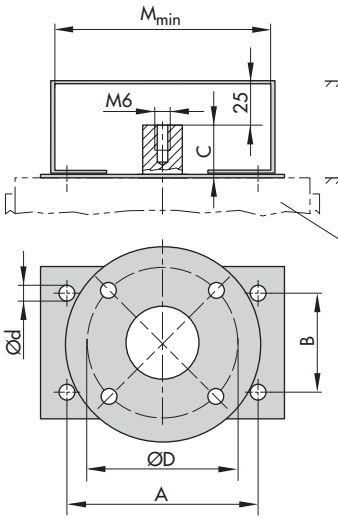

Dimensions in mm						
Size	A	B	C	Ød	M_{min}	D[1)]
AA0	50	25	15	5.5 for M5	66	50
AA1	80	30	20	5.5 for M5	96	50
AA2	80	30	30	5.5 for M5	96	50
AA3	130	30	30	5.5 for M5	146	50
AA4	130	30	50	5.5 for M5	146	50
AA5	200	50	80	6.5 for M6	220	50

1) Flange type F05 acc. to DIN EN ISO 5211

4 Shipment and on-site transport

The work described in this chapter is to be performed only by personnel appropriately qualified to carry out such tasks.

4.1 Accepting the delivered goods

After receiving the shipment, proceed as follows:

1. Check the scope of delivery. Check that the specifications on the nameplate of the positioner match the specifications in the delivery note. See the 'Markings on the device' chapter for nameplate details.
2. Check the shipment for transportation damage. Report any damage to SAMSON and the forwarding agent (refer to delivery note).

4.2 Removing the packaging from the positioner

Observe the following sequence:

➔ Do not remove the packaging until immediately before installing the positioner, pneumatic and option modules.

➔ Dispose and recycle the packaging in accordance with the local regulations.

4.3 Transporting the positioner

➔ Pack the positioner properly to comply with terms of transportation.

Transport instructions

– Protect the positioner against external influences (e.g. impact).

– Protect the positioner against moisture and dirt.

– Observe transport temperature depending on the permissible ambient temperature (see the 'Design and principle of operation' chapter).

4.4 Storing the positioner

NOTICE

Risk of positioner damage due to improper storage.

➔ *Observe the storage instructions.*

➔ *Avoid longer storage periods.*

➔ *Contact SAMSON in case of different storage conditions or longer storage times.*

Storage instructions

– Protect the positioner against external influences (e.g. impact, shocks, vibration).

– Do not damage the corrosion protection (coating).

– Protect the positioner against moisture and dirt. In damp spaces, prevent con-

densation. If necessary, use a drying agent or heating.

– Observe storage temperature depending on the permissible ambient temperature (see the 'Design and principle of operation' chapter).
– Store the positioner with the cover closed.
– Seal the pneumatic and electrical connections.

5 Installation

The work described in this chapter is to be performed only by personnel appropriately qualified to carry out such tasks.

⚠ DANGER

Risk of fatal injury due to the ignition of an explosive atmosphere.

➔ *Observe EN 60079-14 (VDE 0165, Part 1) for work on the positioner in potentially explosive atmospheres.*

➔ *Work in potentially explosive atmospheres is to be performed only by personnel who has undergone special training or instructions or who is authorized to work on explosion-protected devices in hazardous areas.*

⚠ WARNING

Crush hazard arising from moving parts on the valve.

➔ *Do not touch any moving valve parts while the control valve is in operation.*

➔ *Before performing any mounting or installation work on the positioner, put the control valve out of operation by disconnecting and locking the supply air and control signal.*

➔ *Do not impede the movement of the actuator and plug stem by inserting objects into the yoke.*

NOTICE

Risk of malfunction due to incorrect mounting parts/accessories.

➔ *Only use the mounting parts and accessories listed in these mounting and operating instructions to mount and install the positioner. Pay special attention to the type of attachment.*

5.1 Installation conditions

Work position

The work position for the positioner is the front view onto the operating controls on the positioner seen from the position of operating personnel.

Operators must ensure that, after installation of the positioner, the operating personnel can perform all necessary work safely and easily access the device from the work position.

Mounting position

➔ Do not seal or restrict the vent opening (see Fig. 5-1) when the device is installed on site.

➔ Observe mounting position (see Fig. 5-2).

5.2 Preparation for installation

Before installation, make sure that the following conditions are met:

– The positioner is not damaged.
– The air supply is not yet connected to the positioner.
– The current is not yet connected to the positioner.

Proceed as follows:

➔ Lay out the necessary material and tools to have them ready during installation work.
➔ Adjust correct lever and pin position (see Chapter 5.4).
➔ Remove the protective caps from the pneumatic connections.

5.3 Turning the positioner shaft

To turn or hold the positioner shaft in position, turn or hold the actual shaft lock by hand.

➔ Do not use the locking screw to turn the positioner shaft knob. Only turn the rotary knob by hand (see Fig. 5-5).

5.4 Adjusting the lever and pin position

i ***Note***

*The **M** lever is included in the scope of delivery.*
***S, L, XL** levers are available as accessories (see Table 5-7). The **XXL** lever is available on request.*

The positioner is adapted to the actuator and to the rated travel by the lever on the back of the positioner and the pin inserted into the lever.

The travel tables on page 5-4 show the maximum adjustment range at the positioner. The travel that can be implemented at the valve is additionally restricted by the selected fail-safe position and the required compression of the actuator springs.

The positioner is equipped with the M lever (pin position 35) as standard (see Fig. 5-3).

If a pin position other than position **35** with the standard **M** lever is required or an **L** or **XL** lever size is required, proceed as follows (see Fig. 5-4):

1. Fasten the follower pin (2) in the assigned lever hole (pin position as specified in the travel tables on page 5-4). Only use the longer follower pin included in the mounting kit.
2. Place the lever (1) on the shaft of the positioner and fasten it tight using the disk spring (1.2) and nut (1.1).

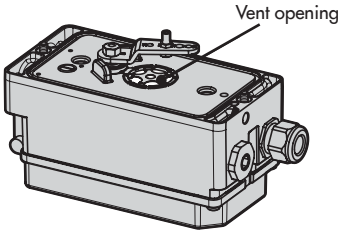

Fig. 5-1: *Vent opening (back of the positioner)*

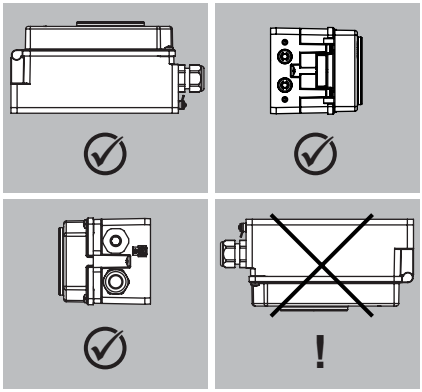

Fig. 5-2: *Permissible mounting positions*

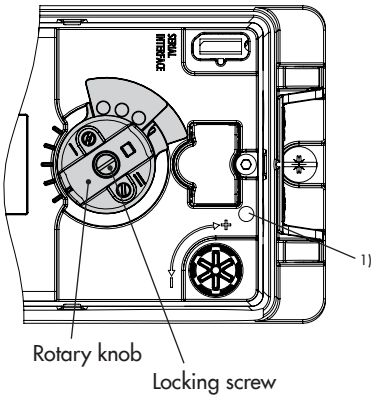

Fig. 5-5: *Shaft lock*

1) Volume restriction (positioner hardware 2.00.xx only)

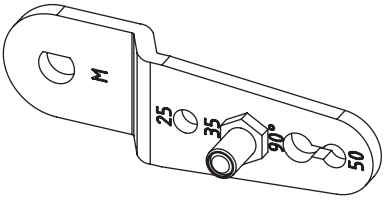

Fig. 5-3: *M lever with pin position 35*

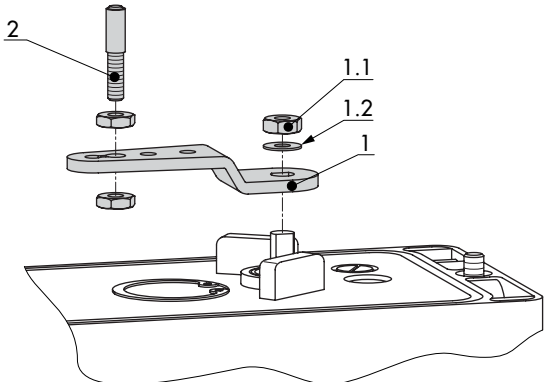

1 Lever
1.1 Nut
1.2 Disk spring
2 Follower pin

Fig. 5-4: *Mounting the lever and follower pin*

5.4.1 Travel tables

Note

*The **M** lever is included in the scope of delivery.*
***S, L, XL** levers for attachment according to IEC 60534-6 (NAMUR) are available as accessories (see 5-42 on page Table 5-7). The **XXL** lever is available on request.*

Table 5-1: *Direct attachment to Type 3277-5 and Type 3277 Actuator*

Actuator size [cm²]	Rated travel [mm]	Adjustment range at positioner Travel [mm]	Required lever	Assigned pin position
120	7.5	5.0 to 25.0	M	25
120/175/ 240/350	15	7.0 to 35.0	M	35
355/700/750	30	10.0 to 50.0	M	50

Table 5-2: *Attachment according to IEC 60534-6 (NAMUR)*

SAMSON valves with Type 3271 Actuator		Adjustment range at positioner Other control valves		Required lever	Assigned pin position
Actuator size [cm²]	Rated travel [mm]	Min. travel [mm]	Max. travel [mm]		
120 with Type 3510 Valve	7.5	3.5	17.5	Simulant	17
120	7.5	5.0	25.0	M	25
120/175/240/350	15	7.0	35.0	M	35
700/750	7.5	7.0	35.0	M	35
355/700/750	15 and 30	10.0	50.0	M	50
1000/1400/2800	30	14.0	70.0	L	70
	60	20.0	100.0	L	100
1400/2800	120	40.0	200.0	XL	200
1400	250	60.0	300.0	XXL	300

Table 5-3: *Attachment to rotary actuators*

Opening angle	Required lever	Assigned pin position
24 to 100°	M	90°

5.5 Positioner attachment

5.5.1 Direct attachment

a) Type 3277-5 Actuator

➔ Actuator with 120 cm² (see Fig. 5-6)

➔ Required mounting parts and accessories: Table 5-5 on page 5-40.

➔ Observe travel tables on page 5-4.

➔ Depending on the fail-safe action of the actuator "actuator stem extends" or "actuator stem retracts", mount the switchover plate (9) on the actuator yoke. Align the symbol for attachment to the left or right side with the marking (see Fig. 5-6, top).

1. Mount connecting plate (6) or pressure gauge bracket (7) with pressure gauges on the positioner. Make sure that the two seals (6.1) are seated properly.
2. Remove screw plug (4) on the back of the positioner and seal the signal pressure output (38) on the connecting plate (6) or on the pressure gauge bracket (7) with the stopper (5) included in the accessories.
3. Place follower clamp (3) on the actuator stem, align it and screw tight so that the mounting screw is located in the groove of the actuator stem.
4. Mount cover plate (10) with narrow side of the cut-out (Fig. 5-6, on the left) pointing towards the signal pressure connection. Make sure that the flat gasket (14) points towards the actuator yoke.
5. Check the pin position of the follower pin (2) on M lever (1). Refer to travel tables for type of attachment. If necessary, change the pin position (see Chapter 5.4).
6. Insert molded seal (15) into the groove of the positioner housing and insert the seal (10.1) on the back of the housing.
7. Place positioner on the cover plate (10) in such a manner that the follower pin (2) rests on the top of the follower clamp (3). Adjust the lever (1) correspondingly and open the positioner cover to hold the positioner shaft in position at the shaft lock (Fig. 5-5). The lever (1) must rest on the follower clamp with spring force. Fasten the positioner on the cover plate (10) using the two fastening screws.
8. Mount cover (11) on the other side. Make sure that the vent plug is located at the bottom when the control valve is installed to allow any condensed water that collects to drain off.

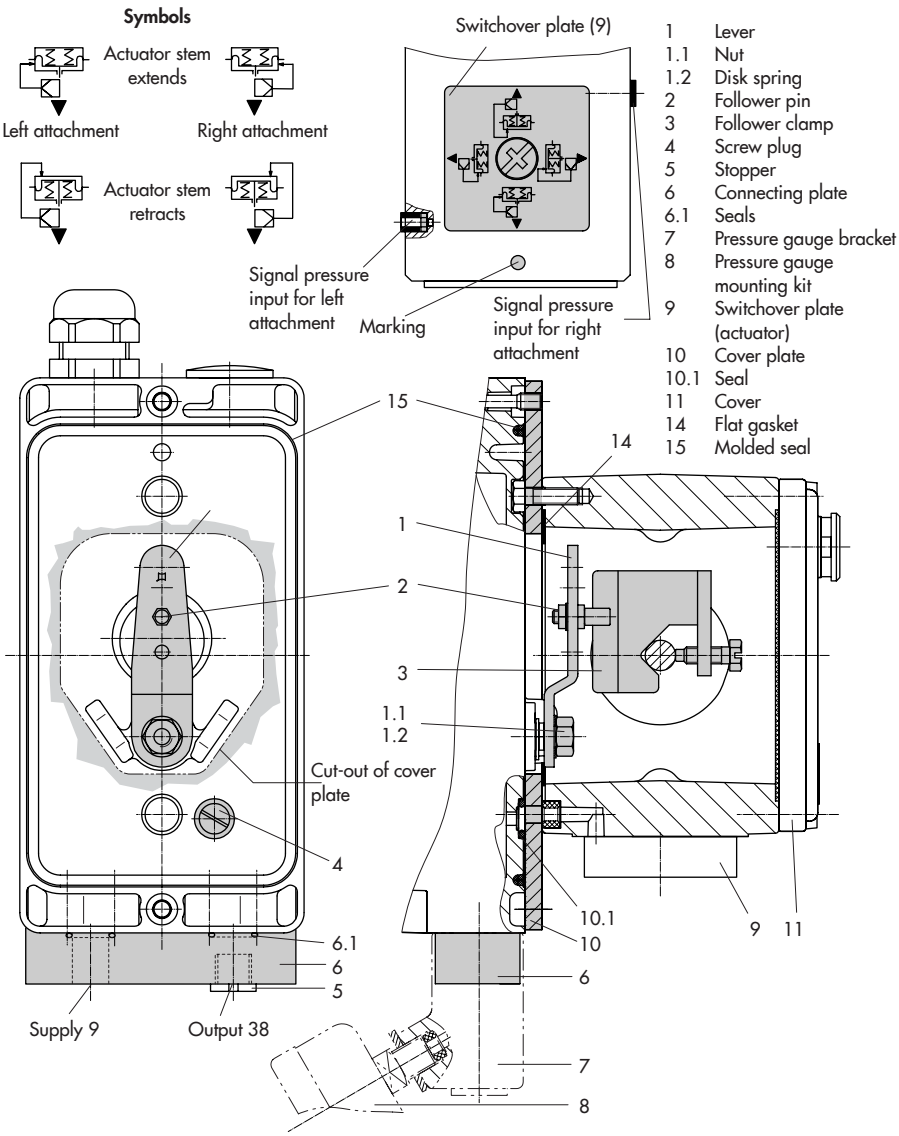

Fig. 5-6: *Direct attachment – Signal pressure connection for Type 3277-5 Actuator with 120 cm²*

b) Type 3277 Actuator

➔ Actuators with 175 to 750 cm² (Fig. 5-7)

➔ Required mounting parts and accessories: Table 5-6 on page 5-41.

➔ Observe travel tables on page 5-4.

1. Seal the signal pressure output at the back of the positioner with the screw plug (4, order no. 0180-1254) and the associated O-ring (order no. 0520-0412) if the screw plug is not yet in place.
2. Place follower clamp (3) on the actuator stem, align it and screw tight so that the mounting screw is located in the groove of the actuator stem.
3. Mount cover plate (10) with narrow side of the cut-out (Fig. 5-7, on the left) pointing towards the signal pressure connection. Make sure that the flat gasket (14) points towards the actuator yoke.
4. Check the pin position of the follower pin (2) on M lever (1). Refer to travel tables for type of attachment. If necessary, change the pin position (see Chapter 5.4).
5. Insert molded seal (15) into the groove of the positioner housing.
6. Place positioner on the cover plate in such a manner that the follower pin (2) rests on the top of the follower clamp (3). Adjust the lever (1) correspondingly and open the positioner cover to hold the positioner shaft in position at the shaft lock (Fig. 5-5). The lever (1) must rest on the follower clamp with spring force. Fasten the positioner on the cover plate (10) using the two fastening screws.
7. Make sure that the tip of the gasket (16) projecting from the side of the connection block is positioned to match the actuator symbol for the actuator's fail-safe action "actuator stem extends" or "actuator stem retracts". If this is not the case, unscrew the three fastening screws and lift off the cover. Turn the gasket (16) by 180° and re-insert it.
8. Place the connection block (12) with the associated seals against the positioner and the actuator yoke and fasten using the screw (12.1). For actuators with fail-safe action "actuator stem retracts", additionally remove the stopper (12.2) and mount the external signal pressure pipe.
9. Mount cover (11) on the other side. Make sure that the vent plug is located at the bottom when the control valve is installed to allow any condensed water that collects to drain off.

5.5.2 Attachment according to IEC 60534-6

➔ Required mounting parts and accessories: Table 5-7 on page 5-42.

➔ Observe travel tables on page 5-4.

➔ See Fig. 5-8

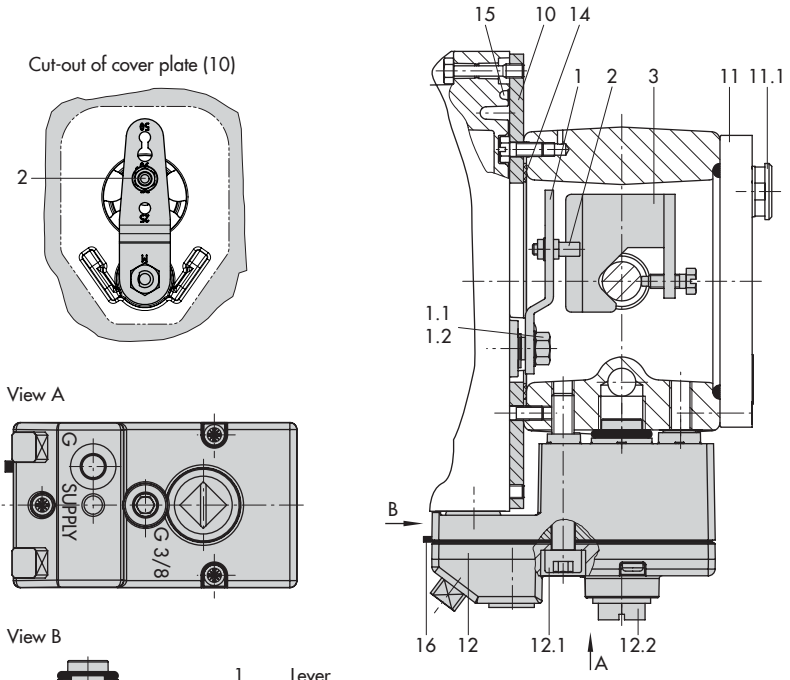

1	Lever
1.1	Nut
1.2	Disk spring
2	Follower pin
3	Follower clamp
10	Cover plate
11	Cover
11.1	Vent plug
12	Connection block
12.1	Screw
12.2	Stopper or connection for external piping
13	Switch plate
14	Flat gasket
15	Molded seal
16	Gasket

Fig. 5-7: *Direct attachment – Signal pressure connection for Type 3277 Actuator with 175 to 750 cm²*

The positioner is attached to the control valve using a NAMUR bracket (10).

1. Seal the signal pressure output at the back of the positioner with the screw plug (4, order no. 0180-1254) and the associated O-ring (order no. 0520-0412) if the screw plug is not yet in place.
2. Screw the two bolts (14) to the bracket (9.1) of the stem connector (9), place the follower plate (3) on top and use the screws (14.1) for fastening.

   Actuator sizes 2800 cm² and 1400 cm² with 120 mm travel:
   - For a travel of 60 mm or smaller, screw the longer follower plate (3.1) directly to the stem connector (9).
   - For a travel exceeding 60 mm, mount the bracket (16) first and then the follower plate (3) to the bracket together with the bolts (14) and screws (14.1).
3. Mount NAMUR bracket (10) to the control valve as follows:
   - For **attachment to the NAMUR rib**, use an M8 screw (11) and toothed lock washer directly in the yoke hole.
   - For attachment to **valves with rod-type yokes**, use two U-bolts (15) around the yoke. Align the NAMUR bracket (10) according to the embossed scale so that the follower plate (3) is shifted by half the angle range to the NAMUR bracket (the slot of the follower plate is centrally aligned with the NAMUR bracket at mid valve travel).
4. Mount connecting plate (6) or pressure gauge bracket (7) with pressure gauges (8) on the positioner. Make sure that the two seals (6.1) are seated properly.
5. Select required lever size (1) M, L or XL and pin position according to the actuator size and valve travel listed in the travel table on page 5-4.

Should a pin position other than position **35** with the standard **M** lever be required or an **L** or **XL** lever size be required, proceed as follows:

6. Fasten the follower pin (2) in the assigned lever hole (pin position as specified in the travel table). Only use the longer follower pin (2) included in the mounting kit.
7. Place the lever (1) on the shaft of the positioner and fasten it tight using the disk spring (1.2) and nut (1.1).
   Move lever once all the way as far as it will go in both directions.
8. Place positioner on the NAMUR bracket in such a manner that the follower pin (2) rests in the slot of the follower plate (3, 3.1). Adjust the lever (1) correspondingly.
   Screw the positioner to the NAMUR bracket using its two fastening screws.

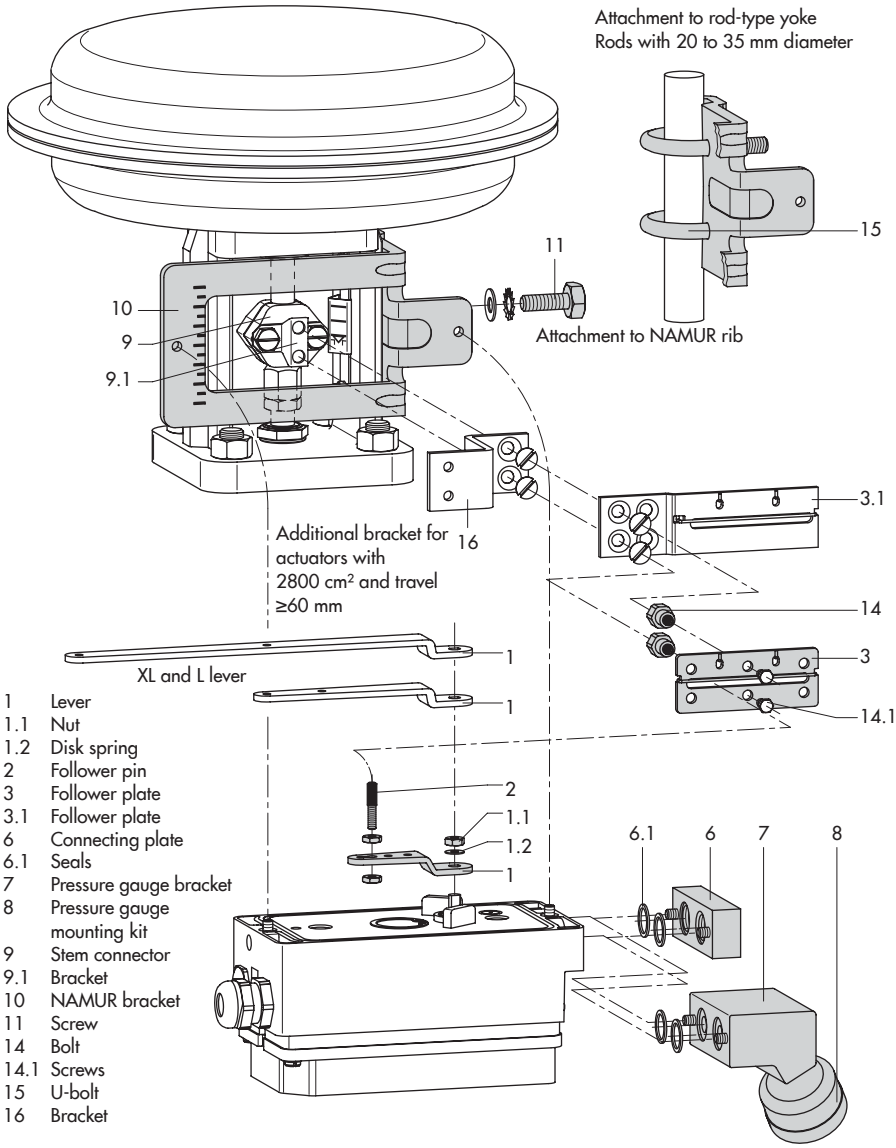

Fig. 5-8: *Attachment according to IEC 60534-6 (NAMUR)*

5.5.3 Attachment to Type 3510 Micro-flow Valve

➔ See Fig. 5-9

➔ Required mounting parts and accessories: Table 5-7 on page 5-42.

➔ Observe travel tables on page 5-4.

The positioner is attached to the valve yoke using a bracket.

1. Seal the signal pressure output at the back of the positioner with the screw plug (4, order no. 0180-1254) and the associated O-ring (order no. 0520-0412) if the screw plug is not yet in place.
2. Fasten the bracket (9.1) to the stem connector.
3. Screw the two bolts (9.2) to the bracket (9.1) of the stem connector (9), place the follower plate (3) on top and use the screws (9.3) for fastening.
4. Mount the travel indication scale (accessories) to the outer side of the yoke using the hex screws (12.1), ensuring that the scale is aligned with the stem connector.
5. Fasten the hex bar (11) onto the outer side of yoke by screwing the M8 screws (11.1) directly into the holes on the yoke.
6. Fasten the bracket (10) to the hex bar using the hex screw (10.1), shim and tooth lock washer.
7. Mount connecting plate (6) or pressure gauge bracket (7) with pressure gauges on the positioner. Make sure that the two seals (6.1) are seated properly.
8. Unscrew the standard M lever (1) including follower pin (2) from the positioner shaft.
9. Take the S lever (1) and screw the follower pin (2) in the hole for pin position 17.
10. Place the S lever on the positioner shaft and screw tight using the disk spring (1.2) and nut (1.1).
    Move lever once all the way as far as it will go in both directions.
11. Place positioner on the bracket (10) in such a manner that the follower pin slides into the groove of the follower pin (3). Adjust the lever (1) correspondingly. Screw the positioner to the bracket (10) using both its screws.

5.5.4 Attachment according to VDI/VDE 3847-1

➔ See Fig. 5-10.

This type of attachment allows the positioner to be replaced quickly while the process is running by blocking the air in the actuator.

The signal pressure can be blocked in the actuator by unscrewing the red retaining screw (20) and turning the air blocker (19) on the bottom of the adapter block.

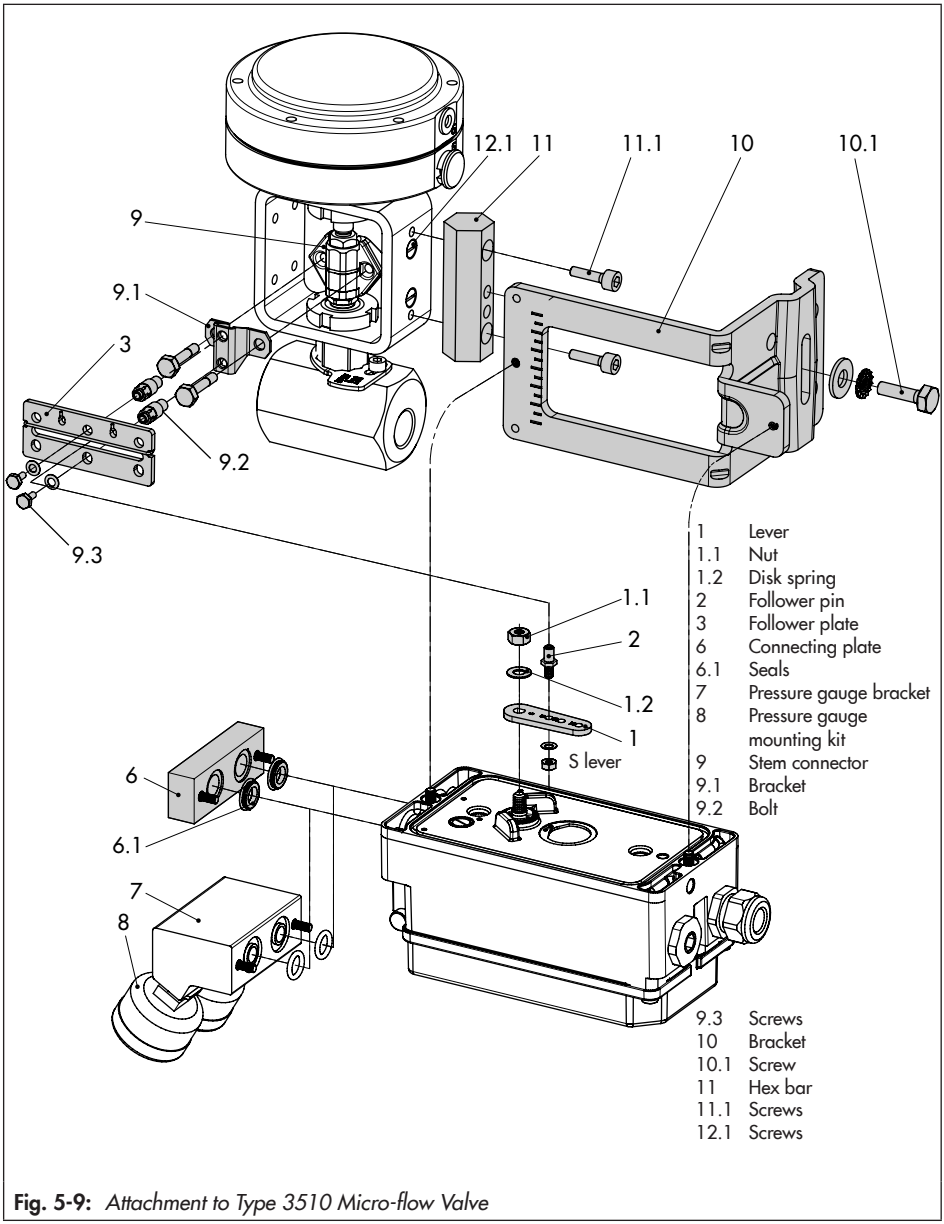

Fig. 5-9: *Attachment to Type 3510 Micro-flow Valve*

Attachment to Type 3277 Actuator (see Fig. 5-10)

➔ Required mounting parts and accessories: Table 5-8 on page 5-43.

Mount the positioner on the yoke as shown in Fig. 5-10. The signal pressure is routed to the actuator over the connecting plate (12), for actuators with fail-safe action "actuator stem extends" internally through a bore in the valve yoke and for "actuator stem retracts" through external piping.

Only the Y1 port is required for positioner attachment. The Y2 port can be used for air purging of the spring chamber.

1. Seal the signal pressure output at the back of the positioner with the screw plug (4, order no. 0180-1254) and the associated O-ring (order no. 0520-0412) if the screw plug is not yet in place.
2. Place follower clamp (3) on the actuator stem, align it and screw tight so that the mounting screw is located in the groove of the actuator stem.
3. Place the adapter bracket (6) on the positioner and mount using the screws (6.1). Make sure that the seals are correctly seated. For positioners **with air purging**, remove the stopper (5) before mounting the positioner. For positioners **without air purging**, replace the screw plug (4) with a vent plug.
4. For actuators with 355, 700 or 750 cm², remove the follower pin (2) on the M lever (1) on the back of the positioner from pin position 35, reposition it in the hole for pin position 50 and screw tight.

   For actuators 175, 240 and 350 cm² with 15 mm travel, keep the follower pin (2) in pin position 35.
5. Insert the molded seal (6.2) in the groove of the adapter bracket (6).
6. Insert the molded seal (17.1) into the turnboard (17) and mount the turnboard to the adapter block (13) using the screws (17.2).
7. Mount the dummy plate (18) to the turnboard (17) using the screws (18.1). Make sure that the seals are correctly seated.

---

i ***Note***

A solenoid valve can also be mounted in place of the dummy plate (18). The orientation of the turnboard (17) determines the mounting position of the solenoid valve. Alternatively, a restrictor plate can be mounted (▶ AB 11).

---

8. Insert the screws (13.1) through the middle holes of the adapter block (13).
9. Place the connecting plate (12) together with the seal (12.1) onto the screws (13.1) corresponding to the fail-safe action "actuator stem extends" or "actuator stem retracts". The fail-safe action that applies is determined by aligning the groove of the adapter block (13) with the groove of the connecting plate (12) (Fig. 5-11).

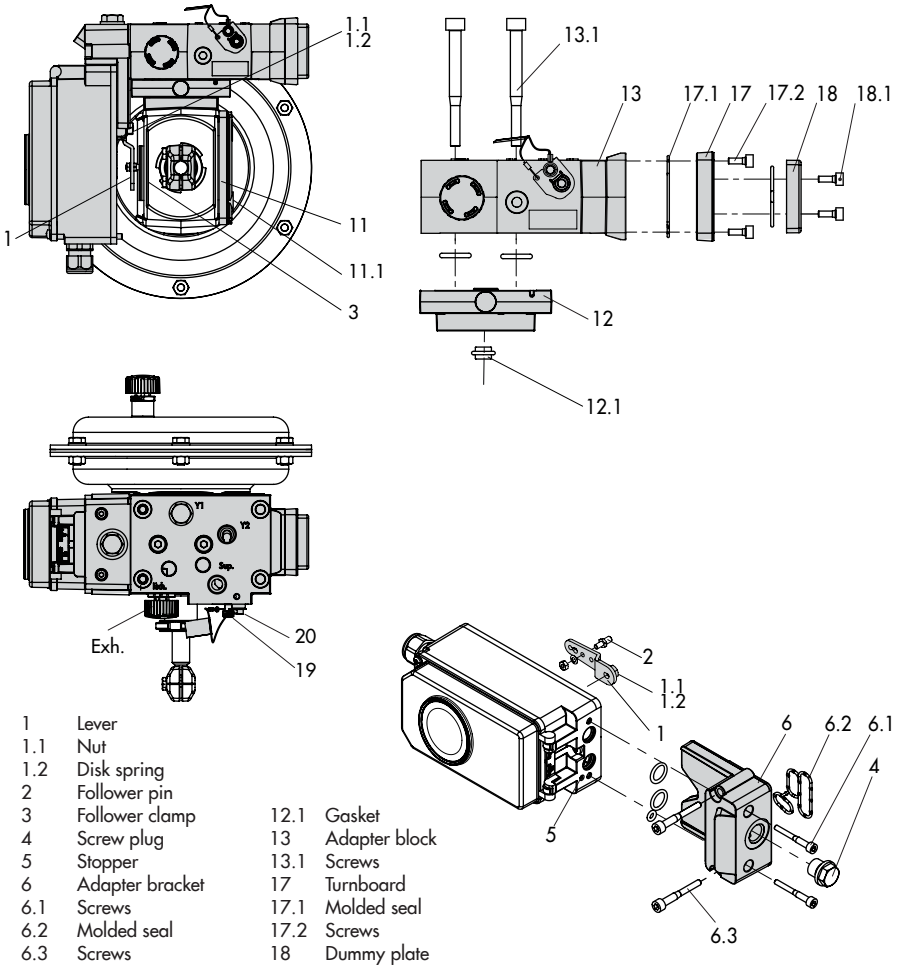

1	Lever	12.1	Gasket
1.1	Nut	13	Adapter block
1.2	Disk spring	13.1	Screws
2	Follower pin	17	Turnboard
3	Follower clamp	17.1	Molded seal
4	Screw plug	17.2	Screws
5	Stopper	18	Dummy plate
6	Adapter bracket	18.1	Screws
6.1	Screws	19	Air blocker
6.2	Molded seal	20	Retaining screw
6.3	Screws		
11	Cover		
11.1	Vent plug		
12	Connecting plate		

Fig. 5-10: *Attachment according to VDI/VDE 3847 onto Type 3277 Actuator*

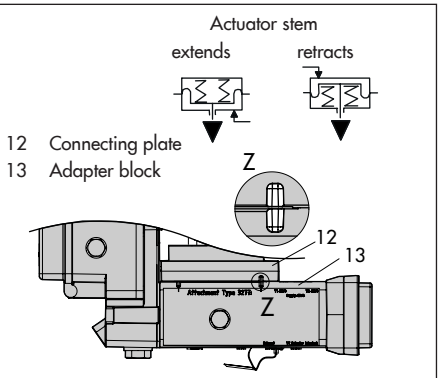

Fig. 5-11: *Fail-safe action*

10. Mount the adapter block (13) together with the connecting plate (12) to the actuator using the screws (13.1).
11. Insert the vent plug (11.1) into the **Exh.** connection.
12. For fail-safe action "actuator stem extends", seal the Y1 port with a blanking plug.

    For fail-safe action "actuator stem retracts", connect the Y1 port to the signal pressure connection of the actuator.
13. Place positioner on the adapter block (13) in such a manner that the follower pin (2) rests on the top of the follower clamp (3). Adjust the lever (1) correspondingly and open the positioner cover to hold the positioner shaft in position at the shaft lock (Fig. 5-5). The lever (1) must rest on the follower clamp with spring force.
14. Fasten the positioner to the adapter block (13) using the two fastening screws (6.3). Make sure the molded seal (6.2) is properly seated.
15. Mount cover (11) on the other side to the yoke. Make sure that the vent plug is located at the bottom when the control valve is installed to allow any condensed water that collects to drain off.

Attachment according to VDI/VDE 3847 to a NAMUR rib (see Fig. 5-12)

➔ Required mounting parts and accessories: Table 5-8 on page 5-43.

➔ Observe travel tables on page 5-4.

1. **Series 240 Valves, actuator size up to 1400-60 cm²:** Screw the two bolts (14) to the bracket of the stem connector or directly to the stem connector (depending on the version), place the follower plate (3) on top and use the screws (14.1) to fasten it.

   Type 3251 Valve, 350 to 2800 cm²: Screw the longer follower plate (3.1) to the bracket of the stem connector or directly to the stem connector (depending on the version).

   Type 3254 Valve, 1400-120 to 2800 cm²: Screw the two bolts (14) to the bracket (16). Fasten the bracket (16) onto the stem connector, place the follower plate (3) on top and use the screws (14.1) to fasten it.

   Mount the positioner on the NAMUR rib as shown in Fig. 5-12.

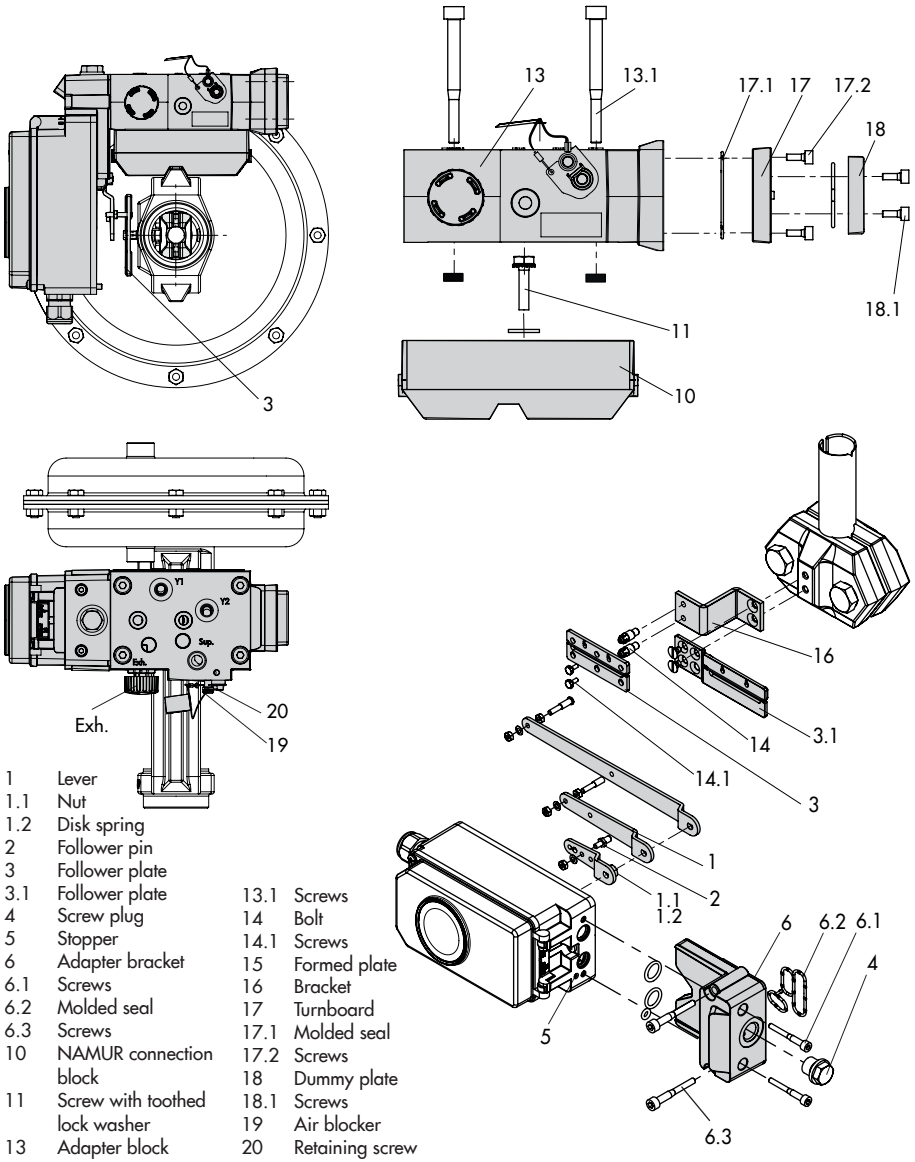

1	Lever	13.1	Screws
1.1	Nut	14	Bolt
1.2	Disk spring	14.1	Screws
2	Follower pin	15	Formed plate
3	Follower plate	16	Bracket
3.1	Follower plate	17	Turnboard
4	Screw plug	17.1	Molded seal
5	Stopper	17.2	Screws
6	Adapter bracket	18	Dummy plate
6.1	Screws	18.1	Screws
6.2	Molded seal	19	Air blocker
6.3	Screws	20	Retaining screw
10	NAMUR connection block		
11	Screw with toothed lock washer		
13	Adapter block		

Fig. 5-12: *Attachment according to VDI/VDE 3847 to a NAMUR rib*

2. For **attachment to the NAMUR rib**, fasten the NAMUR connection block (10) directly into the existing yoke bore using the screw and toothed lock washer (11). Align the marking on the NAMUR valve connection (on the side marked '1') to 50 % travel.

   For attachment to **valves with rod-type yokes** using the formed plate (15), which is placed around the yoke: screw the four studs into the NAMUR connection block (10). Place the NAMUR connection block on the rod and position the formed plate (15) on the opposite side. Use the nuts and toothed lock washers to fasten the formed plate onto the studs. Align the marking on the NAMUR valve connection (on the side marked '1') to 50 % travel.

3. Place the adapter bracket (6) on the positioner and mount using the screws (6.1). Make sure that the seals are correctly seated. For positioners **with air purging**, remove the stopper (5) before mounting the positioner. For positioners **without air purging**, replace the screw plug (4) with a vent plug.
4. Select required lever size (1) M, L or XL and pin position according to the actuator size and valve travel listed in the travel table on page 5-4.

Should a pin position other than position 35 with the standard M lever be required or an L or XL lever size be required, proceed as follows:

– Fasten the follower pin (2) in the assigned lever hole (pin position as specified in the travel table). Only use the longer follower pin (2) included in the mounting kit.
– Place the lever (1) on the shaft of the positioner and fasten it tight using the disk spring (1.2) and nut (1.1).
– Move lever once all the way as far as it will go in both directions.

5. Insert the molded seal (6.2) in the groove of the adapter bracket.
6. Insert the molded seal (17.1) into the turnboard (17) and mount the turnboard to the adapter block (13) using the screws (17.2).
7. Mount the dummy plate (18) to the turnboard using the screws (18.1). Make sure that the seals are correctly seated.

i ***Note***

A solenoid valve can also be mounted in place of the dummy plate (18). The orientation of the turnboard (17) determines the mounting position of the solenoid valve. Alternatively, a restrictor plate can be mounted (▶ AB 11).

8. Fasten the adapter block (13) to the NAMUR connection block using the screws (13.1).
9. Insert the vent plug into the Exh. connection.
10. Place the positioner on the adapter block (13) in such a manner that the follower pin (2) rests on the top of the follower plate (3, 3.1). Adjust the lever (1) correspondingly.

Fasten the positioner to the adapter block (13) using the two fastening screws (6.3). Make sure the molded seal (6.2) is properly seated.

11. For **single-acting actuators without air purging**, connect the Y1 port of the adapter block to the signal pressure connection of the actuator. Seal the Y2 port with a blanking plug.

    For **double-acting actuators and actuators with air purging**, connect the Y2 port of the adapter block to the signal pressure connection of the second actuator chamber or spring chamber of the actuator.

5.5.5 Attachment according to VDI/VDE 3847-2

Attachment according to VDI/VDE 3847-2 for SRP (single-acting) and DAP (double-acting) rotary actuators in sizes 60 to 1200 with NAMUR interface and air purging of the actuator's spring chamber allows the direct attachment of the positioner without additional piping.

Additionally, the positioner can be replaced quickly while the process is running by blocking the air in single-acting actuators.

Blocking the actuator in place (see Fig. 5-13):

1. Unscrew the red retaining screw (1).
2. Turn the air blocker (2) on the bottom of the adapter block according to the inscription.

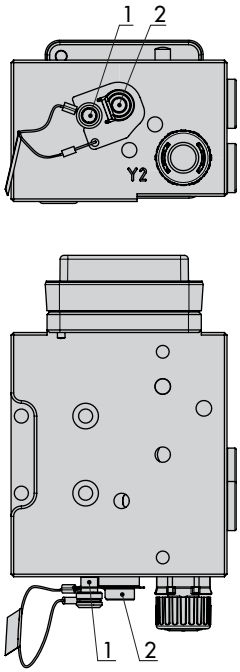

1 Retaining screw
2 Air blocker

Fig. 5-13: *Adapter block for attachment according to VDI/VDE 3847-2*

a) Version for single-acting actuator

Mounting on Type 31a Actuator (edition 2020+), SRP version

➔ See Fig. 5-15

1. Seal the signal pressure output at the back of the positioner with the screw plug (4, order no. 0180-1254) and the associated O-ring (order no. 0520-0412) if the screw plug is not yet in place.
2. Fasten the adapter block (1) to the actuator's NAMUR interface using the four fastening screws (2).

➔ Make sure that the seals are correctly seated.

3. Mount the follower wheel (3) onto the actuator shaft. Use the matching shaft adapter (see Table 5-9 on page 5-43).
4. Place the adapter bracket (4) onto the adapter block (1) and fasten it using the fastening screws (5).

➔ Make sure that the seals are correctly seated.

5. Insert and fasten the follower pin in the 90° position on the positioner's lever (see Fig. 5-14). Only use the longer follower pin included in the mounting kit.
6. Align the positioner on the adapter bracket (1) in such a way that the follower pin engages into the actuator's follower wheel (3).
7. Fasten the positioner onto the adapter bracket (4) using the fastening screws (6).

➔ Make sure that the seals are correctly seated.

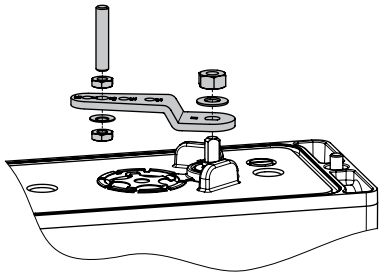

Fig. 5-14: *Follower pin in 90° position*

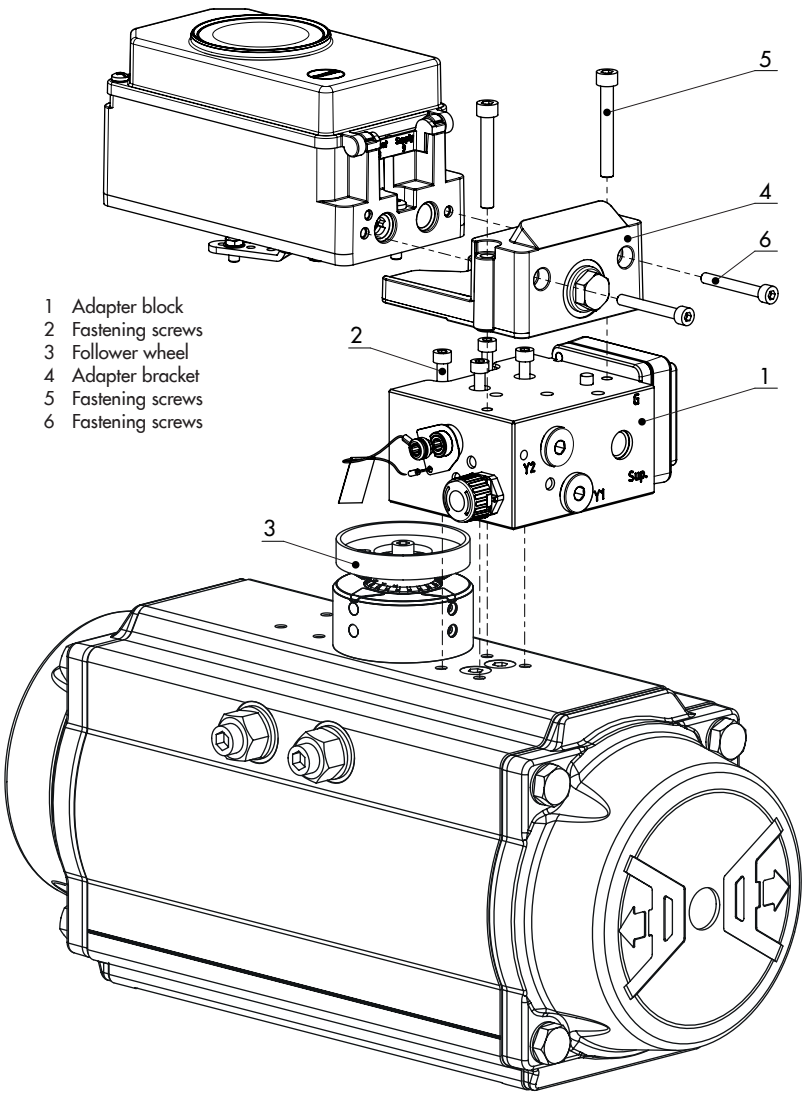

Fig. 5-15: *Mounting on a single-acting actuator*

b) Version for double-acting actuator

A reversing amplifier must be additionally mounted for applications with double-acting (DAP) actuators or applications with single-acting (SAP) actuators that include partial stroke testing.

In this case, a special adapter bracket (4) is required for mounting.

➔ See Fig. 5-17.

1. Seal the signal pressure output at the back of the positioner with the screw plug (4, order no. 0180-1254) and the associated O-ring (order no. 0520-0412) if the screw plug is not yet in place.
2. Fasten the adapter block (1) to the actuator's NAMUR interface using the four fastening screws (2). Make sure the seals are correctly seated.
3. Mount the follower wheel (3) onto the actuator shaft. Use the matching adapter (see Table 5-9 on page 5-43).
4. Place the adapter bracket (4) onto the adapter block (1) and fasten it using the fastening screws (5). Make sure the seals are correctly seated.
5. Insert and fasten the follower pin into the 90° position on the positioner's lever (see Fig. 5-14 on page 5-20).
6. Align the positioner on the adapter bracket (1) in such a way that the follower pin engages into the actuator's follower wheel (3).
7. Fasten the positioner onto the adapter bracket (4) using the fastening screws (6).
8. Mount the Type 3710 Reversing Amplifier (7) together with the two guide bushings (8) and terminal plate (9) onto the adapter bracket using the associated fastening screws (10). Make sure the seals are correctly seated.
9. Remove the vent plug at the adapter block and seal the opening with the G ¼ screw plug.
10. Mount the turnboard marked '***Doppel***' for double-acting actuators or the turnboard marked '***PST***' for single-acting actuators with partial stroke testing. See Fig. 5-16. Make sure the seals are correctly seated.

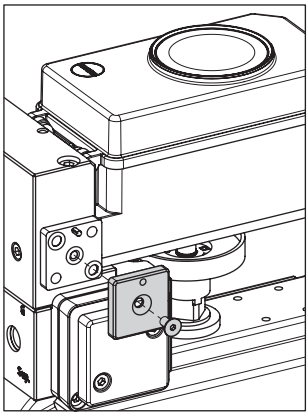

Fig. 5-16: *Mounting the turnboard*

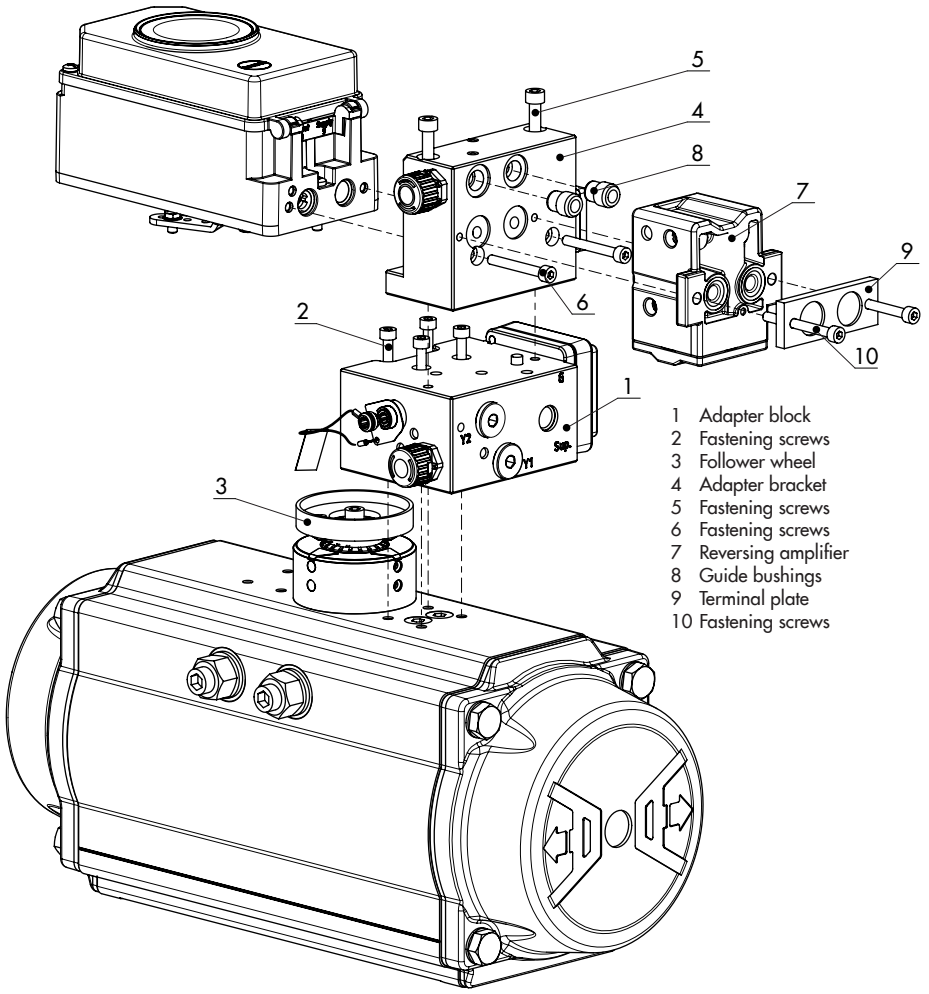

Fig. 5-17: *Mounting on a double-acting actuator or single-acting actuator with partial stroke testing*

Intermediate plate for AA4 interface

➔ See Fig. 5-18.

An intermediate plate (11) must be mounted between the adapter block and adapter bracket for SRP and DAP rotary actuators in sizes 900 and 1200 with AA4 interface. This plate is included in the accessories for the shaft adapter AA4 (see Table 5-9 on page 5-43).

Mounting a solenoid valve

➔ See Fig. 5-19.

A solenoid valve (13) can also be mounted in place of the dummy plate (12). The orientation of the turnboard (14) determines the mounting position of the solenoid valve. Alternatively, a restrictor plate can be mounted. Further information can be found in the document ▶ AB 11 (Accessories for Solenoid Valves).

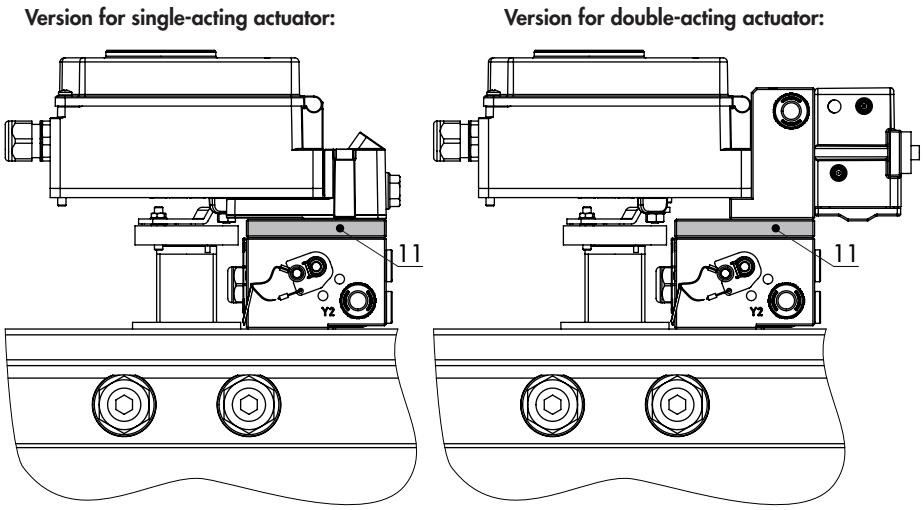

11 Intermediate plate

Fig. 5-18: *Intermediate plate for actuators in sizes 900 and 1200 for AA4 interface*

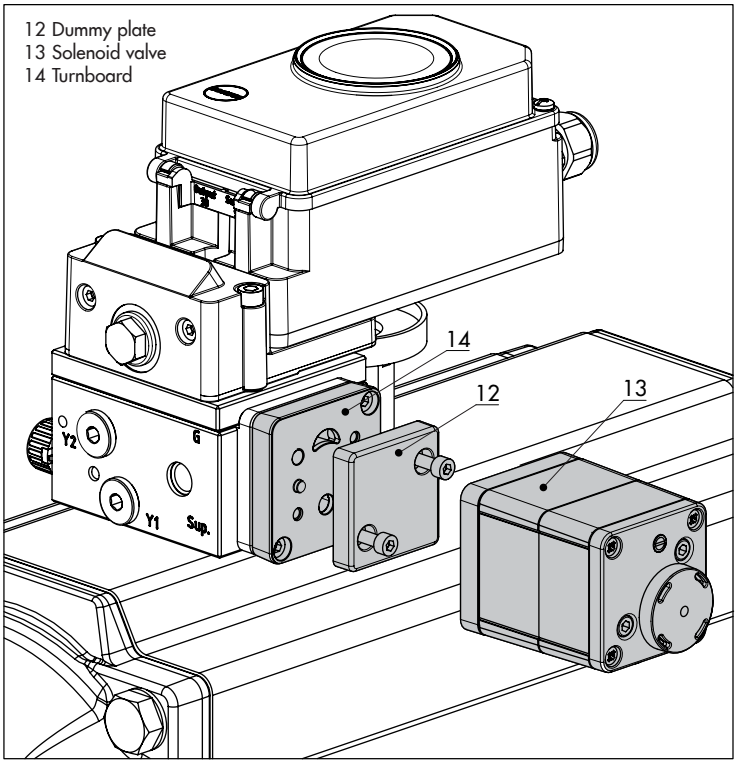

Fig. 5-19: *Mounting a solenoid valve*

5.5.6 Attachment according to VDI/VDE 3845

➔ See Fig. 5-21

➔ Required mounting parts and accessories: Table 5-10 on page 5-44.

➔ Observe travel tables on page 5-4.

The positioner is mounted to the rotary actuator using two pairs of brackets.

Prior to attaching the positioner to the SAMSON Type 3278 Rotary Actuator, mount the associated spacer (5) to the free end of the rotary actuator shaft.

i ***Note***

On mounting the positioner as described below, it is important to observe the actuator's direction of rotation.

1. Place follower clamp (3) on the slotted actuator shaft or spacer (5).
2. Place coupling wheel (4) with flat side facing the actuator on the follower clamp (3). Align slot so that it matches the direction of rotation when the valve is in its closed position (see Fig. 5-21).
3. Fasten the coupling wheel and follower clamp tightly onto the actuator shaft using screw (4.1) and disk spring (4.2).
4. Fasten the bottom pair of brackets (10.1) with the bends pointing either facing to the inside or to the outside (depending on the actuator size) onto the actuator housing. Position the top pair of brackets (10) and fasten.
5. Mount connecting plate (6) or pressure gauge bracket (7) with pressure gauges on the positioner. Make sure that the two seals are seated properly. Double-acting springless rotary actuators require the use of a reversing amplifier on the connection side of the positioner housing (see Chapter 5.5.7).
6. Unscrew the standard follower pin (2) from the positioner's **M** lever (1). Use the metal follower pin (Ø 5 mm) included in the mounting kit and screw tight into the hole for pin position **90**°.
7. Place positioner on the top bracket (10) and tighten. Taking the actuator's direction of rotation into account, adjust lever (1) so that it engages in the slot of the coupling wheel (4) with its follower pin (Fig. 5-21). It must be guaranteed that the lever (1) is parallel to the long side of the positioner when the actuator is at half its angle of rotation.

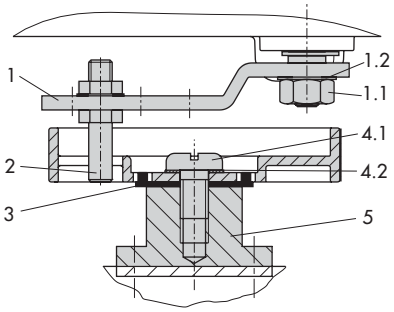

Fig. 5-20: *Mounting the coupling wheel on Type 3278*

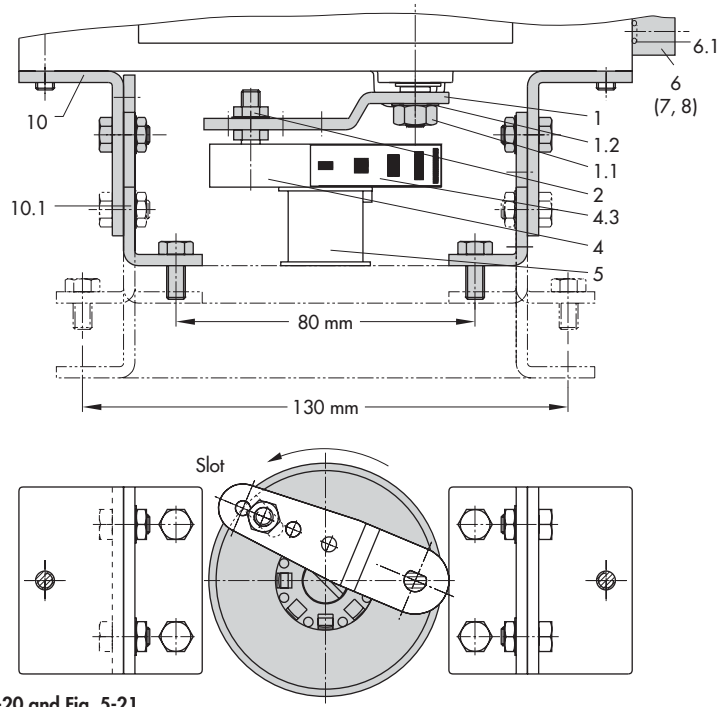

Legend for Fig. 5-20 and Fig. 5-21

1	Lever
1.1	Nut
1.2	Disk spring
2	Follower pin
3	Follower clamp
4	Coupling wheel
4.1	Screw
4.2	Disk spring
4.3	Scale plate
5	Actuator shaft Adapter for Type 3278
6	Connecting plate
6.1	Seals
7	Pressure gauge bracket
8	Pressure gauge mounting kit
10	Top pair of brackets
10.1	Bottom pair of brackets

Fig. 5-21: *Attachment to rotary actuators*

8. Stick the scale plate (4.3) on the coupling wheel so that the arrow tip indicates the closed position and it can be easily read when the valve is installed.

a) Heavy-duty version

➔ See Fig. 5-23

➔ Required mounting parts and accessories: Table 5-10 on page 5-44.

Both mounting kits contain all the necessary mounting parts. The parts for the actuator size used must be selected from the mounting kit.

Prepare actuator and mount possibly required adapter supplied by the actuator manufacturer.

1. Seal the signal pressure output at the back of the positioner with the screw plug (4, order no. 0180-1254) and the associated O-ring (order no. 0520-0412) if the screw plug is not yet in place.
2. Mount the housing (10) onto the rotary actuator. In case of VDI/VDE attachment, place spacers (11) underneath, if necessary.
3. For **SAMSON Type 3278 and VETEC S160 Rotary Actuators**, fasten the adapter (5) onto the free end of the shaft and for **VETEC R Actuator**, place on the adapter (5.1). For **Type 3278, VETEC S160** and **VETEC R** Actuators, place on the adapter (3). For VDI/VDE version, this step depends on the actuator size.
4. Stick adhesive label (4.3) onto the coupling wheel in such a manner that the yellow part of the sticker is visible in the window of the housing when the valve is OPEN. Adhesive labels with explanatory symbols are enclosed and can be stuck on the housing, if required.
5. Fasten coupling wheel (4) on the slotted actuator shaft or adapter (3) using screw (4.1) and disk spring (4.2).

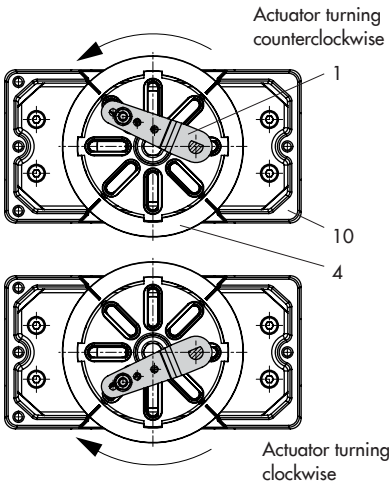

Fig. 5-22: *Direction of rotation*

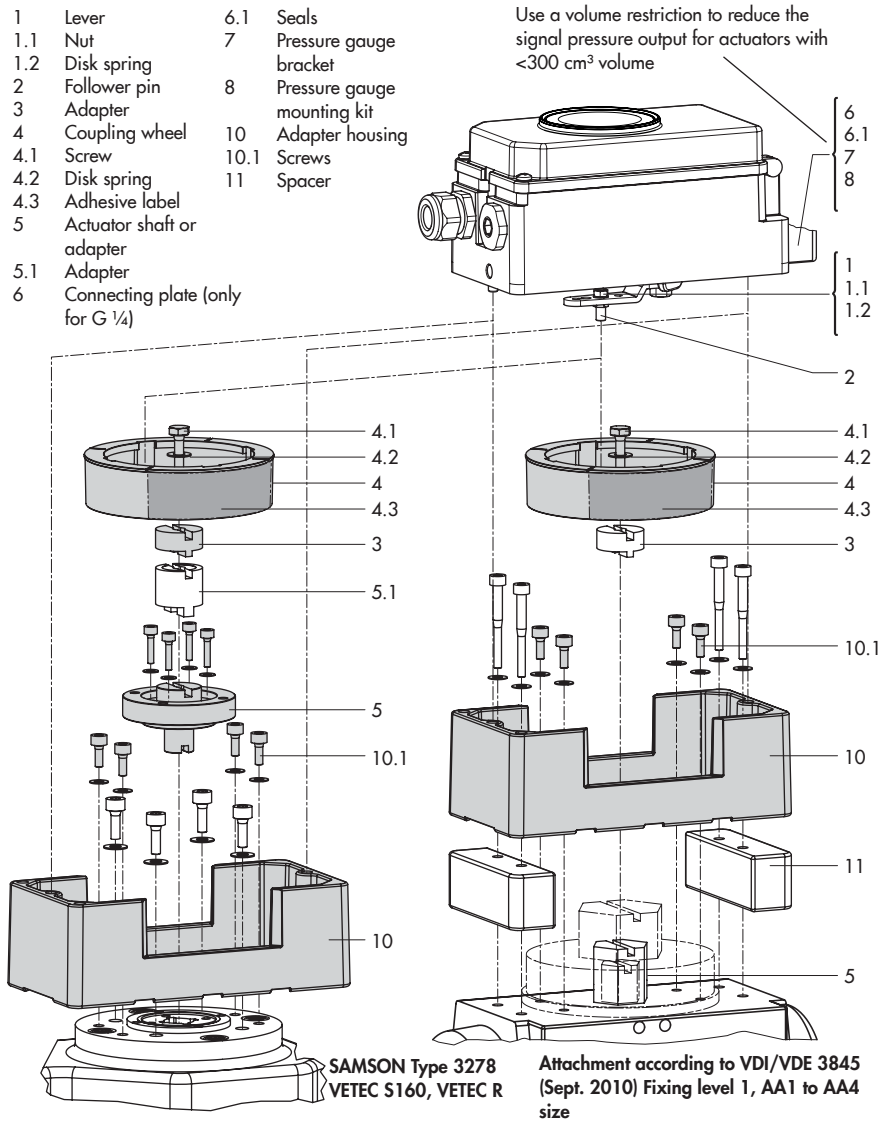

Fig. 5-23: *Attachment to rotary actuators (heavy-duty version)*

6. Unscrew the standard follower pin (2) from the positioner's M lever (1). Attach the follower pin (Ø5 mm) included in the mounting kit to pin position 90°.
7. Mount connecting plate (6) for required G ¼ connecting thread or pressure gauge bracket (7) with pressure gauges on the positioner. Make sure that the two seals (6.1) are seated properly. Double-acting springless rotary actuators require the use of a reversing amplifier on the connection side of the positioner housing (see Chapter 5.5.7).
8. Place positioner on housing (10) and screw it tight. Taking the actuator's direction of rotation into account, adjust lever (1) so that it engages in the correct slot with its follower pin (Fig. 5-22).

5.5.7 Reversing amplifier for double-acting actuators

For the use with double-acting actuators, the positioner must be fitted with a reversing amplifier:

➔ SAMSON Type 3710 Reversing Amplifier, ▶ EB 8392

The following applies to all reversing amplifiers:

The signal pressure of the positioner is supplied at the output 1 of the reversing amplifier. An opposing pressure, which equals the required supply pressure (Z) when added to the pressure at output 1, is applied at output 2.
The following relationship applies:
output 1 + output 2 = Supply pressure (Z).

Connect output 1 to the signal pressure connection on the actuator that causes the valve to open when the pressure rises.

Connect output 2 to the signal pressure connection on the actuator that causes the valve to close when the pressure rises.

5.5.8 Attaching positioners with stainless steel housings

Positioners with stainless steel housings require mounting parts that are completely made of stainless steel or free of aluminum.

i ***Note***

The pneumatic connecting plate and pressure gauge bracket are available in stainless steel (order numbers listed below). The Type 3710 Pneumatic Reversing Amplifier is also available in stainless steel.

Connecting plate (stainless steel)	G ¼	1400-7476
	¼ NPT	1400-7477
Pressure gauge bracket (stainless steel)	G ¼	1402-0265
	¼ NPT	1402-1369

Table 5-4 to Table 5-10 apply for attaching positioners with stainless steel housings with the following restrictions:

Direct attachment
All mounting kits from Table 5-5 and Table 5-6 can be used. The connection block is not required. The stainless steel version of the pneumatic connecting plate routes the air internally to the actuator.

Attachment according to IEC 60534-6 (NAMUR rib or attachment to rod-type yokes)
All mounting kits from Table 5-7 can be used. Connecting plate in stainless steel.

Attachment to rotary actuators
All mounting kits from Table 5-10 can be used except for the heavy-duty version. Connecting plate in stainless steel.

5.5.9 Air purging function for single-acting actuators

The instrument air leaving the positioner is diverted to the actuator spring chamber to provide corrosion protection inside the actuator. Observe the following:

Direct attachment to Type 3277-5 (stem extends FA/stem retracts FE)
The air purging function is automatically provided.

Direct attachment to Type 3277, 175 to 750 cm²

Stem extends: remove the stopper (12.2, Fig. 5-7) at the black connection block and make a pneumatic connection to the spring chamber on the vented side.

Stem retracts: the air purging function is automatically provided.

Attachment according to IEC 60534-6 (NAMUR rib or attachment to rod-type yokes) and to rotary actuators

The positioner requires an additional port for the exhaust air that can be connected over piping. An adapter available as an accessory is used for this purpose:

Threaded bushing (M20x1.5)	G ¼	0310-2619
	¼ NPT	0310-2550

i ***Note***

*The adapter uses one of the M20x1.5 connections in the housing which means **only one** cable gland can be installed.*

Should other valve accessories be used which vent the actuator (e.g. solenoid valve, volume booster, quick exhaust valve), this exhaust air must also be included in the purging function. The connection over the adapter at the positioner must be protected with a check valve (e.g. screw fitting with restriction G ¼, order no. 1991-5777) or ¼ NPT (order no. 1992-3178) mounted in the piping. Otherwise the pressure in the positioner housing would rise above the ambient pressure and damage the positioner when the exhausting components respond suddenly.

5.6 Establishing pneumatic connections

⚠ WARNING

Risk of injury by possible movement of exposed parts (positioner, actuator or valve) after connecting the signal pressure.

➔ *Do not touch or block exposed moving parts.*

NOTICE

Incorrect pneumatic connection will damage the positioner and lead to malfunction.

➔ *Screw the screw fittings into the connecting plate, pressure gauge mounting block or connection block from the accessories.*

The pneumatic ports are located on the back of the positioner.

NOTICE

Risk of malfunction due to failure to comply with air quality requirements.

➔ *Only use supply air that is dry and free of oil and dust.*

➔ *Read the maintenance instructions for upstream pressure reducing stations.*

➔ *Blow through all air pipes and hoses thoroughly before connecting them.*

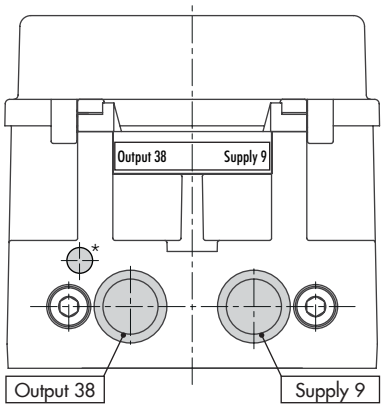

Additional vent hole only in TROVIS 3730-1-xxx0xx0xxx2x10xxxxx version

Fig. 5-24: *Pneumatic connections*

5.6.1 Supply air

⚠ WARNING

Sudden loud noise when the pneumatic actuator vents.

➔ *Wear hearing protection when working near the valve.*

! NOTICE

Risk of malfunction due to incorrect sequence of mounting, installation and start-up.

➔ *Observe the following sequence.*

1. *Remove the protective caps from the pneumatic connections.*
2. *Mount the positioner on the valve.*
3. *Connect the supply air.*
4. *Connect the electrical power.*
5. *Perform settings.*

The pneumatic connections in the connecting plate, pressure gauge mounting block and connection block are optionally designed as a bore with ¼ NPT or G ¼ thread. Customary fittings for metal or copper tubing or plastic hoses can be used.

➔ Read instructions in Chapter 5.6.

5.6.2 Signal pressure connection

The signal pressure connection depends on how the positioner is mounted onto the actuator:

Type 3277 Actuator

➔ The signal pressure connection is fixed.

Attachment according to IEC 60534-6

➔ For "actuator stem retracts" fail-safe action: connect the signal pressure to the connection on top of the actuator.

➔ For "actuator stem extends" fail-safe action: connect the signal pressure to the connection on bottom of the actuator.

Rotary actuators (heavy-duty version)

➔ For rotary actuators, the manufacturer's specifications for connection apply.

5.6.3 Output pressure display

Tip

To monitor the supply air and signal pressure, SAMSON recommends mounting pressure gauges (see accessories in Chapter 5.8).

Mounting the pressure gauges:

➔ See Chapter 5.5.2 and Fig. 5-8.

5.6.4 Supply pressure

The required supply air pressure depends on the bench range and the actuator's direction of action (fail-safe action).

The bench range is written on the nameplate either as the bench range or signal pressure range depending on the actuator. The direction of action is marked FA or FE or by a symbol.

Actuator stem extends FA (AIR TO OPEN)

Fail-close (for globe and angle valves):

➔ Required supply pressure = Upper bench range value + 0.2 bar, at least 1.4 bar.

Actuator stem retracts FE (AIR TO CLOSE)

Fail-open (for globe and angle valves):

For tight-closing valves, the maximum signal pressure pst_{max} is roughly estimated as follows:

$$pst_{max} = F + \frac{d^2 \cdot \pi \cdot \Delta p}{4 \cdot A} \text{ [bar]}$$

d = Seat diameter [cm]
Δp = Differential pressure across the valve [bar]
A = Actuator area [cm²]
F = Upper bench range value of the actuator [bar]

If there are no specifications, calculate as follows:

➔ Required supply pressure = Upper bench range value + 1 bar

5.7 Establishing electrical connections

⚠ DANGER

Risk of fatal injury due to the formation of an explosive atmosphere.

➔ *For installation in hazardous areas, observe the relevant standards that apply in the country of use.*
Standard applicable in Germany:
EN 60079-14 (VDE 0165, Part 1) Explosive Atmospheres – Electrical Installations Design, Selection and Erection.

⚠ WARNING

Sudden loud noise when the pneumatic actuator vents.

➔ *Wear hearing protection when working near the valve.*

⚠ WARNING

Incorrect electrical connection will render the explosion protection unsafe.

➔ *Adhere to the terminal assignment.*
➔ *Do not undo the enameled screws.*
➔ *Do not exceed the maximum permissible values specified in the EC type examination certificates when interconnecting intrinsically safe electrical equipment (U_i or U_0, I_i or I_0, P_i or P_0, C_i or C_0 and L_i or L_0).*

Selecting cables and wires

➔ Observe the relevant clauses of EN 60079-14 for installation of intrinsically safe circuits.

➔ Seal cable entries left unused with plugs.

➔ Fit equipment used in ambient temperatures below –20 °C with metal cable entries.

Equipment with type of protection Ex nA

In equipment operated according to type of protection Ex nA (non-sparking equipment), circuits may be connected, interrupted or switched while energized only during installation, maintenance or repair.

Use certified cable glands and blanking plugs with appropriate type of protection and IP rating ≥6X, which are suitable for the certified temperature range.

The signal circuit is connected using screw terminals (terminal 11/12) for electrical conductors with a wire cross-section from 0.2 to 2.5 mm². The tightening torque is 0.5 to 0.6 Nm.

Equipment with type of protection Ex ec

In equipment operated according to type of protection Ex ec (increased safety), circuits may be connected, interrupted or switched while energized only during installation, maintenance or repair.

Use certified cable glands and blanking plugs with appropriate type of protection and IP rating ≥6X, which are suitable for the certified temperature range.

The signal circuit is connected using screw terminals (terminal 11/12) for electrical conductors with a wire cross-section from 0.2 to 2.5 mm². The tightening torque is 0.5 to 0.6 Nm.

Equipment with type of protection Ex t

In equipment operated according to type of protection Ex t (protection by enclosure), circuits may be connected, interrupted or switched while energized only during installation, maintenance or repair.

Opening the enclosure cover in potentially explosive dust atmospheres during operation may cause the explosion protection to become ineffective.

Use certified cable glands and blanking plugs with appropriate type of protection and IP rating ≥6X, which are suitable for the certified temperature range.

The signal circuit is connected using screw terminals (terminal 11/12) for electrical conductors with a wire cross-section from 0.2 to 2.5 mm². The tightening torque is 0.5 to 0.6 Nm.

5.7.1 Cable entry with cable gland

The housing of the TROVIS 3730-1 Positioner has two threaded boreholes, which can be fitted with cable glands as required.

➔ The cable gland version depends on the ambient temperature range (see technical data in the 'Design and principle of operation' chapter).

➔ The screw terminals are designed for wire cross-sections of 0.2 to 2.5 mm² (tightening torque 0.5 Nm).

➔ Connect **one** current source at the maximum.

In general, it is not necessary to connect the device to a bonding conductor. Should this be required, however, this conductor can be connected inside or outside of the device.

5.7.2 Electrical power

NOTICE

Risk of malfunction due to incorrect sequence of mounting, installation and start-up.

➔ *Observe the following sequence.*

1. *Remove the protective caps from the pneumatic connections.*
2. *Mount the positioner on the valve.*
3. *Connect the supply air.*
4. *Connect the electrical power.*
5. *Perform settings.*

➔ Connect options as shown in Fig. 5-26 to Fig. 5-28, if necessary.

➔ Connect the electrical power (mA signal) as shown in Fig. 5-25.

5.7.3 Switching amplifier according to EN 60947-5-6

The operation of the limit contacts requires switching amplifiers to be connected in the output circuit. They must comply with the limit values of the output circuits conforming to EN 60947-5-6.

➔ Observe the relevant regulations for installation in hazardous areas.

For applications in safe areas (non-hazardous areas), software limit contacts can be directly interconnected to the binary input of the PLC in accordance with IEC 61131. This applies to the standard operating range for digital inputs according to Clause 5.2.1.2 of IEC 61131-2 with the rated voltage of 24 V DC.

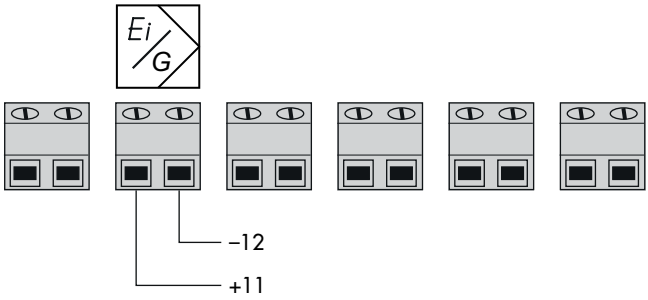

Fig. 5-25: *Connecting the mA control signal*

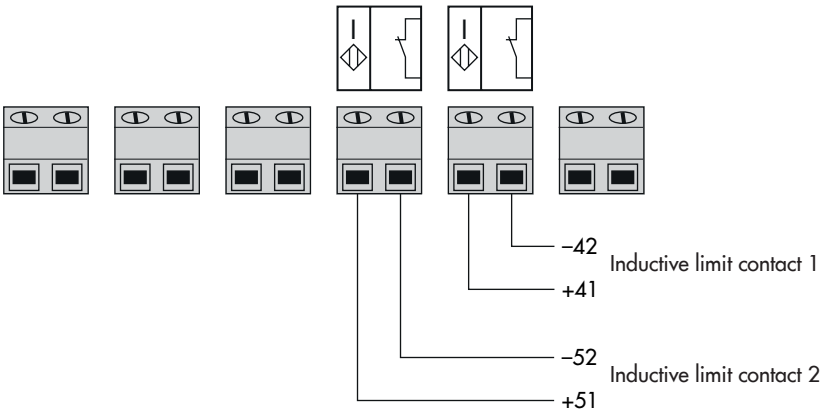

Fig. 5-26: *Terminal assignment of inductive limit contacts*

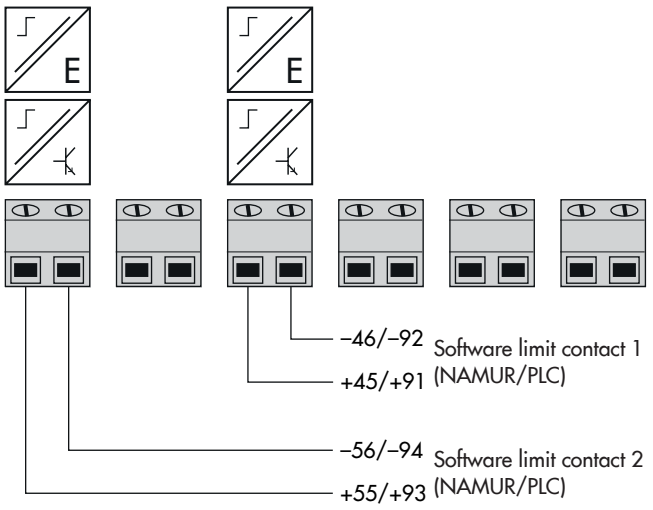

Fig. 5-27: *Terminal assignment of software limit contacts*

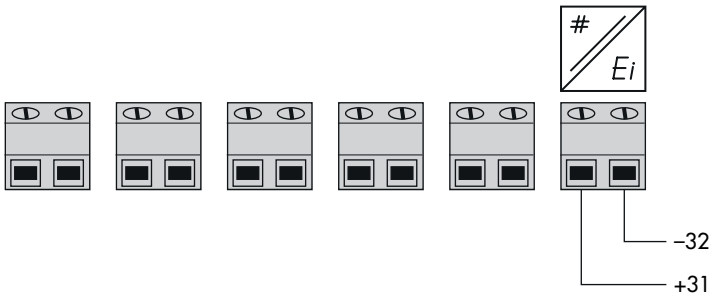

Fig. 5-28: *Terminal assignment of position transmitter*

5.8 Accessories

Table 5-4: *General accessories*

Designation		Order no.
Reversing amplifier for double-acting actuators		Type 3710
M20x1.5 cable gland	Black plastic (6 to 12 mm clamping range)	8808-1011
	Blue plastic (6 to 12 mm clamping range)	8808-1012
	Nickel-plated brass (6 to 12 mm clamping range)	1890-4875
	Nickel-plated brass (10 to 14 mm clamping range)	1992-8395
	Stainless steel 1.4305 (8 to 14.5 mm clamping range)	8808-0160
Adapter M20x1.5 to ½ NPT	Powder-coated aluminum	0310-2149
	Stainless steel	1400-7114
M lever		0510-0510
L lever		0510-0511
XL lever		0510-0512
XXL lever		0510-0525
Isolated USB interface adapter (SSP interface to USB port on a computer)		1400-9740
TROVIS-VIEW 6661 (download available: www.samsongroup.com > Downloads > Software & Drivers > TROVIS-VIEW)		

Table 5-5: *Direct attachment to Type 3277-5 (see Chapter 5.5.1 a))*

Designation			Order no.
Mounting parts	Standard version for actuators 120 cm² or smaller		1400-7452
Accessories for actuator	Old switchover plate for Type 3277-5xxxxxx.**00** Actuator (old)		1400-6819
	New switchover plate for Type 3277-5xxxxxx.**01** Actuator (new) [1]		1400-6822
	New connecting plate for Type 3277-5xxxxxx.**01** Actuator (new) [1], G ⅛ and ⅛ NPT		1400-6823
	Old connecting plate for Type 3277-5xxxxxx.**00** Actuator (old): G ⅛		1400-6820
	Old connecting plate for Type 3277-5xxxxxx.**00** (old): ⅛ NPT		1400-6821
Accessories for positioner	Connecting plate (6)	G ¼	1400-7461
		¼ NPT	1400-7462
	Pressure gauge bracket (7)	G ¼	1400-7458
		¼ NPT	1400-7459
	Pressure gauge mounting kit (8) up to max. 6 bar	Stainless steel/brass	1402-1637
		Stainless steel/stainless steel	1402-1638

[1] Only new switchover and connecting plates can be used with new actuators (index .01). Old and new plates are not interchangeable.

Table 5-6: *Direct attachment to Type 3277 (see Chapter 5.5.1 b))*

Mounting parts/accessories		Order no.
Standard version for actuators 175, 240, 350, 355, 700, 750 cm²		1400-7453
Connection block with seals and screw	G ¼	1400-8819
	¼ NPT	1402-0901
Pressure gauge mounting kit up to max. 6 bar	Stainless steel/brass	1402-1637
	Stainless steel/stainless steel	1402-1638
Piping with screw fittings [1]		**Order no.**
Actuator (175 cm²), steel	G ¼/G ⅜	1402-0970
	¼ NPT/⅜ NPT	1402-0976
Actuator (175 cm²), stainless steel	G ¼/G ⅜	1402-0971
	¼ NPT/⅜ NPT	1402-0978
Actuator (240 cm²), steel	G ¼/G ⅜	1400-6444
	¼ NPT/⅜ NPT	1402-0911
Actuator (240 cm²), stainless steel	G ¼/G ⅜	1400-6445
	¼ NPT/⅜ NPT	1402-0912
Actuator (350 cm²), steel	G ¼/G ⅜	1400-6446
	¼ NPT/⅜ NPT	1402-0913
Actuator (350 cm²), stainless steel	G ¼/G ⅜	1400-6447
	¼ NPT/⅜ NPT	1402-0914
Actuator (355 cm²), steel	G ¼/G ⅜	1402-0972
	¼ NPT/⅜ NPT	1402-0979
Actuator (355 cm²), stainless steel	G ¼/G ⅜	1402-0973
	¼ NPT/⅜ NPT	1402-0980
Actuator (700 cm²), steel	G ¼/G ⅜	1400-6448
	¼ NPT/⅜ NPT	1402-0915
Actuator (700 cm²), stainless steel	G ¼/G ⅜	1400-6449
	¼ NPT/⅜ NPT	1402-0916
Actuator (750 cm²), steel	G ¼/G ⅜	1402-0974
	¼ NPT/⅜ NPT	1402-0981
Actuator (750 cm²), stainless steel	G ¼/G ⅜	1402-0975
	¼ NPT/⅜ NPT	1402-0982

[1] For "actuator stem retracts" direction of action;
with air purging of the top diaphragm chamber;
air purging of the spring chamber for "actuator stem extends" direction of action

Table 5-7: *Attachment to NAMUR rib or attachment to rod-type yokes [1] according to IEC 60534-6 (Chapter 5.5.2)*

Travel in mm	Lever	For actuator	Order no.
7.5	S	Type 3271-5 with 60/120 cm² on Type 3510 Micro-flow Valve	1402-0478
5 to 50	M[2]	Actuators from other manufacturers and Type 3271 with 120 to 750 cm² effective areas	1400-7454
14 to 100	L	Actuators from other manufacturers and Type 3271 with 1000 and 1400-60 cm²	1400-7455
30 or 60	L	Type 3271, 1400-120 and 2800 cm² versions with 30/60 mm travel [3]	1400-7466
		Mounting brackets for Emerson and Masoneilan linear actuators (in addition, a mounting kit according to IEC 60534-6 is required depending on the travel). See rows above.	1400-6771
		Valtek Type 25/50	1400-9554

Accessories		Order no.
Connecting plate	G ¼	1400-7461
	¼ NPT	1400-7462
Pressure gauge bracket	G ¼	1400-7458
	¼ NPT	1400-7459
Pressure gauge mounting kit up to max. 6 bar	Stainless steel/brass	1402-1637
	Stainless steel/stainless steel	1402-1638

1) 20 to 35 mm rod diameter
2) M lever is mounted on basic device (included in the scope of delivery)
3) In conjunction with Type 3273 Side-mounted Handwheel with 120 mm rated travel, additionally one bracket (0300-1162) and two countersunk screws (8330-0919) are required.

Table 5-8: *Attachment according to VDI/VDE 3847-1 (see Chapter 5.5.4)*

Mounting parts			Order no.
VDI/VDE 3847 interface adapter			1402-0257
Connecting plate, including connection for air purging of actuator spring chamber	Aluminum	ISO 228/1-G ¼	1402-0268
		¼-18 NPT	1402-0269
	Stainless steel	ISO 228/1-G ¼	1402-0270
		¼-18 NPT	1402-0271
Mounting kit for attachment to SAMSON Type 3277 Actuator with 175 to 750 cm²			1402-0868
Mounting kit for attachment to SAMSON Type 3271 Actuator or third-party actuators			1402-0869
Travel pick-off for valve travel up to 100 mm			1402-0177
Travel pick-off for 100 to 200 mm valve travel (SAMSON Type 3271 Actuator only)			1402-0178

Table 5-9: *Attachment according to VDI/VDE 3847-2 (see Chapter 5.5.5)*

Designation		Order no.
Mounting parts	Mounting block for PFEIFFER Type 31a (edition 2020+) Rotary Actuators with dummy plate for solenoid valve interface	1402-1645
	Dummy plate for solenoid valve interface (sold individually)	1402-1290
	Adapter bracket for Series 3730 (VDI/VDE 3847)	1402-0257
	Adapter bracket for Series 3730 and Type 3710 (DAP/PST)	1402-1590
Accessories for actuator	Shaft adapter AA1	1402-1617
	Shaft adapter AA2	1402-1616
	Shaft adapter AA4	1402-1888

Table 5-10: *Attachment to rotary actuators (see Chapter 5.5.6)*

Mounting parts/accessories			Order no.
Attachment according to VDI/VDE 3845 (September 2010), actuator surface corresponds to fixing level 1			
Size AA1 to AA4, version with CrNiMo steel bracket			1400-7448
Size AA1 to AA4, heavy-duty version, powder-coated aluminum			1400-9244
Size AA1 to AA4, heavy-duty version, stainless steel (316)			1402-1592
Size AA5, heavy-duty version (e.g. Air Torque 10 000)			1400-9542
Bracket surface corresponds to fixing level 2, heavy-duty version			1400-9526
Attachment for rotary actuators with max. 180° opening angle, fixing level 2			1400-8815 and 1400-9837
Attachment to SAMSON Type 3278 with 160/320 cm², CrNiMo steel bracket			1400-7614
Attachment to SAMSON Type 3278 with 160 cm² and to VETEC Type S160, Type R and Type M, heavy-duty version			1400-9245
Attachment to SAMSON Type 3278 with 320 cm² and to VETEC Type S320, heavy-duty version			1400-5891 and 1400-9526
Attachment to Camflex II			1400-9120
Accessories	Connecting plate	G ¼	1400-7461
		¼ NPT	1400-7462
	Pressure gauge bracket	G ¼	1400-7458
		¼ NPT	1400-7459
	Pressure gauge mounting kit up to max. 6 bar	Stainless steel/brass	1402-1637
		Stainless steel/stainless steel	1402-1638

6 Operation

⚠ WARNING

Sudden loud noise when the pneumatic actuator vents.

➔ *Wear hearing protection when working near the valve.*

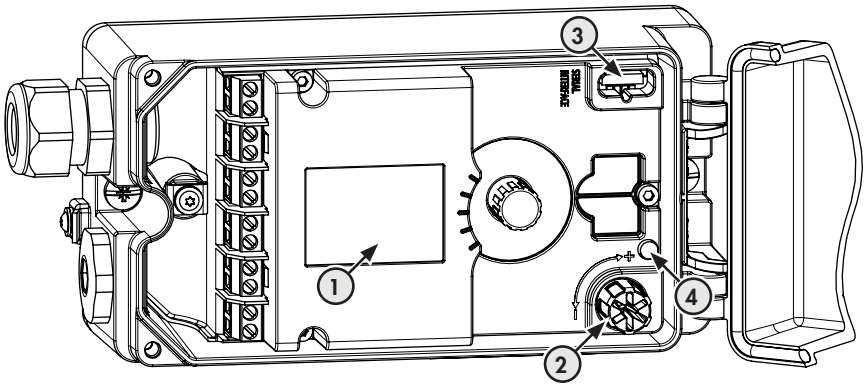

1 Display
2 Rotary pushbutton
3 SSP interface
4 Volume restriction Q (positioner hardware 2.00.xx only)

Fig. 6-1: *Operating controls of TROVIS 3730-1 Positioner*

6.1 Rotary pushbutton

The rotary pushbutton for on-site operation is located next to the display (bottom right or top left, depending on the mounting position).

- Turn: select parameter codes and values.
- Press: confirm selection.
- Press and hold for 3 s: execute function or start test.

6.2 Volume restriction

The volume restriction serves to adapt the air output capacity to the size of the actuator. Depending on the air passage at the actuator, two fixed settings are available (see Chapter 8.1).

6.3 Display

Readings appear on the positioner display (see Fig. 6-2) immediately after the electrical power supply (mA control signal) has been connected.

i ***Note***

LOW *on the display indicates that the set point is lower than 3.8 mA.*
HIGH *on the display indicates that the set point is higher than 22 mA.*

The bar elements indicate the system deviation that depends on the sign (+/–) and the value. One bar element appears per 1 % set point deviation. If the positioner has not yet been initialized, the lever position in degrees in relation to the mid-position is indicated. One bar element corresponds to approximately a 5° angle of rotation.

Table 6-1 lists the meanings of the indicated icons.

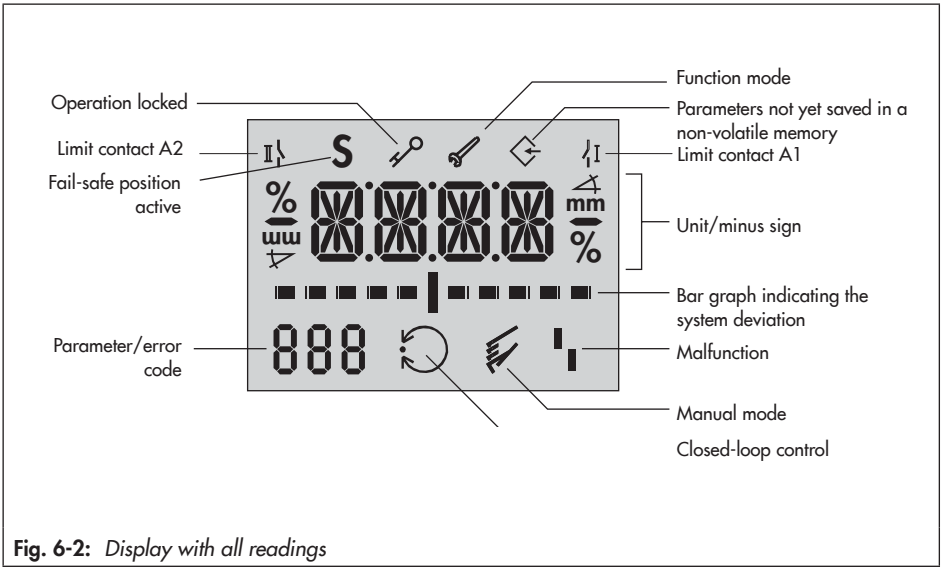

Fig. 6-2: *Display with all readings*

Table 6-1: *Display icons*

Icon	Meaning	Description
	Closed-loop control	The positioner is in closed-loop operation and follows the mA signal.
	Manual mode	The positioner follows the manual set point instead of the mA signal.
	SAFE (fail-safe position)	The positioner vents the pneumatic actuator at its pneumatic output.
	Configuration changed	Parameters have not yet been saved in a non-volatile memory (procedure to save in a non-volatile memory described in the 'Start-up and configuration' chapter).
	Operation locked	Configuration is not enabled. Parameters cannot be changed.
	Function mode	The positioner is being initialized or a test is in progress.
	Fault indication icon	A malfunction or device error exists (see the 'Malfunctions' chapter).
	Limit contact A1	Valve position fell below the limit 1.
	Limit contact A2	Valve position exceeded the limit 2.

7 Start-up and configuration

The work described in this chapter is to be performed only by personnel appropriately qualified to carry out such tasks.

⚠ DANGER

Risk of fatal injury due to the ignition of an explosive atmosphere.

➔ *Observe EN 60079-14 (VDE 0165, Part 1) for work on the positioner in potentially explosive atmospheres.*

➔ *Work in potentially explosive atmospheres is to be performed only by personnel who has undergone special training or instructions or who is authorized to work on explosion-protected devices in hazardous areas.*

⚠ WARNING

Crush hazard arising from moving parts on the valve.

➔ *Do not touch any moving valve parts while the control valve is in operation.*

➔ *Before performing any mounting or installation work on the positioner, put the control valve out of operation by disconnecting and locking the supply air and control signal.*

➔ *Do not impede the movement of the actuator and plug stem by inserting objects into the yoke.*

⚠ WARNING

Sudden loud noise when the pneumatic actuator vents.

➔ *Wear hearing protection when working near the valve.*

Before start-up, make sure the following conditions are met:

– The positioner is properly mounted according to the instructions.

– The pneumatic and electrical connections have been performed according to the instructions.

NOTICE

Risk of malfunction due to incorrect sequence of mounting, installation and start-up.

➔ *Observe the following sequence.*

1. *Remove the protective caps from the pneumatic connections.*
2. *Mount the positioner on the valve.*
3. *Connect the supply air.*
4. *Connect the electrical power.*
5. *Perform settings.*

For normal operation, simply start initialization using Code ***P23*** (see Chapter 7.3) after mounting the positioner on the valve, checking the fail-safe position in Code ***P3*** (see Chapter 7.4), to ensure that the positioner works properly. The positioner only works with its default settings. Further setting options for local operation are described in Chapter 7.5.

Reading after connecting the power

Note

LOW *on the display indicates that the set point is lower than 3.8 mA.*
HIGH *on the display indicates that the set point is higher than 22 mA.*

Reading when the positioner has **not** yet been initialized

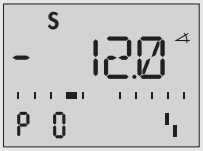

Code ***P0*** is displayed. The fault indication icon and **S** (fail-safe position) appear on the display.

The reading indicates the lever position in degrees in relation to the mid-position.

Reading when the positioner has been initialized:

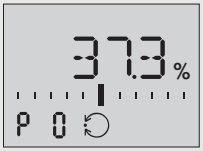

Code P0 is displayed. The positioner is in closed-loop operation indicated by the closed-loop operation icon.

The indicated value corresponds to the control position in %.

Details on initialization of the positioner: Chapter 7.4.

7.1 Enabling configuration to change parameters

Before changing parameter settings in an initialized positioner, configuration must be enabled first by selecting Code ***P2***:

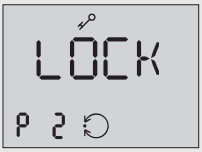

LOCK and the key icon indicate that the configuration is locked. Deactivate locking as follows:

1. Turn ⊛ until Code ***P2*** appears.
2. Press ⊛ to confirm the selected code. ***P2*** blinks.
3. Turn ⊛ until ***OPEN*** appears.
4. Press ⊛ to deactivate the locking.

i ***Note***

Configuration is locked again if no settings are entered within 5 min.

7.2 Saving parameters in a non-volatile memory

Changed parameters are indicated by the ⇦ icon on the display. To save changes to parameters in a non-volatile memory, proceed as follows:

1. After changing a parameter, turn ⊛ until the reading jumps from Code ***P28*** to Code ***P0*** (or from Code ***P0*** to Code ***P28***).

➔ The ⇦ icon disappears. The changes to a parameter are saved in a non-volatile memory.

7.3 Entering the fail-safe position

Define the fail-safe position of the valve taking the valve type and the actuator's direction of action into account.

Fail-safe position	Description
ATO (air to open) setting:	Signal pressure opens the valve, e.g. for a fail-close valve
ATC (air to close) setting:	Signal pressure closes the valve, e.g. for a fail-open valve

The signal pressure is the pneumatic pressure at the output of the positioner applied to the actuator.



Fail-safe position set: ***ATO. To*** change the direction of action:

➔ Enable configuration (Chapter 7.1).

1. Turn ⊛ until Code ***P3*** appears.
2. Press ⊛ to confirm the selected code. ***P3*** blinks.
3. Turn ⊛ to set the fail-safe position (***ATO*** or ***ATC***).
4. Press ⊛ to confirm the selected fail-safe position.

For checking purposes: After successfully completing initialization, the positioner display must read 0 % when the valve is closed and 100 % when the valve is open.

i ***Note***

The changed fail-safe position first becomes effective after the positioner has been re-initialized.

7.4 Initializing the positioner

➔ For positioners with optional limit contacts, read Chapter 7.6 before initializing the positioner.

During initialization the positioner adapts itself optimally to the friction conditions and the signal pressure required by the control valve.

⚠ WARNING

Risk of personal injury due to moving parts on the valve.

➔ *During initialization, do not insert hands or fingers into the valve yoke and do not touch any moving valve parts.*

➔ *Do not block the actuator stem.*

! *NOTICE*

The process is disturbed by the movement of the actuator stem.

➔ *Do not initialize the positioner while the process is running and only after isolating the plant by closing the shut-off valves.*

Tip

*For normal operation, simply start initialization using Code **P23** after mounting the positioner on the valve, checking the fail-safe position (**P3**), to ensure that the positioner works properly. The positioner only works with its default settings.*

The type and extent of self-adaptation depends on the preset parameters. ***MAX*** applies as the default setting for the nominal range (Code ***P5***). During the initialization process, the positioner determines the total travel range or rotational range of the valve (from the CLOSED position to the opposite end position).



Start initialization:

➔ Enable configuration (Chapter 7.1).

1. Turn ⊛ until Code ***P23*** appears.
2. Press ⊛ and hold for 3 s (reading: ***3*** ... ***2*** ... ***1***).

➔ Initialization starts. ***P23*** and ***INIT*** blink during initialization. The time required for the initialization procedure depends on the actuator transit time, which means that initialization can take a few minutes.

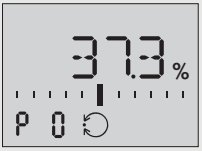

After a successful initialization, Code ***P0*** appears on the display and the positioner changes to closed-loop operation indicated by the closed-loop operation icon.

Initialization is canceled and the fault indication icon appears when initialization fails.

Canceling initialization

The initialization can be canceled:

Cancel initialization:

1. During initialization, press ⊛. Code ***P23*** blinks.
2. Press ⊛ again. The initialization process is canceled.

➔ When the positioner has ***not*** yet been initialized: the positioner goes to the fail-safe position after the initialization process has been canceled.

➔ When the positioner has been initialized: on canceling a new initialization process, the positioner returns to closed-loop operation. The settings of the previous initialization are used. A new initialization can be started directly afterwards.

7.5 Other possible settings

7.5.1 Entering the pin position

When attaching the positioner to the control valve, the follower pin must be inserted in the proper pin position on the lever depending on the travel/angle (see the 'Installation' chapter).



Specify the pin position:

➔ Enable configuration (Chapter 7.1).

1. Turn ⊛ until Code ***P4*** appears.
2. Press ⊛ to confirm the selected code. ***P4*** blinks.
3. Turn ⊛ to select the pin position.
4. Press ⊛ to confirm the setting.

➔ The positioner must be re-initialized after the pin position is changed.

7.5.2 Setting the nominal range

During initialization, the positioner determines the travel/angle of rotation of the closing member from the CLOSED position to the opposite travel stop based on the entered nominal range and adopts this travel/angle as the operating range. The possible adjustment range depends on the selected pin position (see Chapter 7.5.1).



Set the nominal range:

➔ Enable configuration (Chapter 7.1).

1. Turn ⊛ until Code ***P5*** appears.
2. Press ⊛ to confirm the selected code. ***P5*** blinks.
3. Turn ⊛ to select the nominal range of the valve.
4. Press ⊛ to confirm the setting.

➔ The positioner must be re-initialized after the nominal range is changed.

7.5.3 Selecting the characteristic

A selection of three characteristics for globe valves and nine characteristics for rotary valves is available for the TROVIS 3730-1 Positioner (Code ***P6) (see the*** 'Valve characteristic selection' chapter in the Appendix.

Value	Characteristic	Linear actuator	Rotary actuator
P6 = 0	Linear	•	•
P6 = 1	Equal percentage	•	•
P6 = 2	Reverse equal percentage	•	•
P6 = 3	Butterfly valve, linear		•
P6 = 4	Butterfly valve, equal percentage		•
P6 = 5	Rotary plug valve, linear		•
P6 = 6	Rotary plug valve, equal percentage		•
P6 = 7	Segmented ball valve, linear		•
P6 = 8	Segmented ball valve, equal percentage		•



Selecting the characteristic:

➔ Enable configuration (Chapter 7.1).

1. Turn ⊛ until Code ***P6*** appears.
2. Press ⊛ to confirm the selected code. ***P6*** blinks.
3. Turn ⊛ to select the characteristic.
4. Press ⊛ to confirm the setting.

7.5.4 Entering the direction of action

The direction of action (***P8***) is set to increasing/increasing (>>) by default, i.e. when the positioner is initialized, ***0 %*** is displayed when the valve is closed and ***100 %*** when the valve is fully open. If necessary, the direction of action can be changed.

i ***Note***

The direction of action depends on the selected fail-safe position (see Chapter 7.3):

– *After initialization with Code **P3** = **ATO**, Code **P8** is automatically set to **>>** (increasing/increasing).*

– *After initialization with Code **P3** = **ATC**, Code **P8** is automatically set to **<>** (increasing/decreasing).*

– *Code **P8** setting can be adapted as required after initialization is completed.*



Changing the direction of action to increasing/decreasing:

➔ Enable configuration (Chapter 7.1).

1. Turn ⊛ until Code ***P8*** appears.
2. Press ⊛ to confirm the selected code. ***P8*** blinks.
3. Turn ⊛ until ⟨ ⟩ appears.
4. Press ⊛ to confirm the setting.

Table 7-1 shows the relationship between the direction of action and valve position.

Table 7-1: *Relationship between direction of action and valve position*

Valve	CLOSED	OPEN
Display	0 %	100 %
Direction of action increasing/increasing (>>)	4 mA	20 mA
Direction of action increasing/decreasing (<>)	20 mA	4 mA

7.5.5 Limiting the signal pressure

If the maximum actuator force is too high for the valve used, the signal pressure limit can be activated in Code ***P12***. The pressure is then limited to approx. 2.4 bar.



Activate pressure limit:

➔ Enable configuration (Chapter 7.1).

1. Turn ⊛ until Code ***P12*** appears.
2. Press ⊛ to confirm the selected code. ***P12*** blinks.
3. Turn ⊛ and select ***ON***.
4. Press ⊛ to confirm the setting.

7.6 Adjusting the switching points of the optional limit contacts

The switching points of the limit contacts are usually adjusted so that a signal is issued in the travel/angle end positions. Optionally, the switching point can also be adjusted to any position within the travel/angle range, e.g. if an intermediate position is to be indicated.

Both switching points are adjusted at two adjustment screws on the top of the rotary knob:

– Limit contact 1: adjustment screw 1
– Limit contact 2: adjustment screw 2

The adjustment screws are marked: **I** for adjustment screw 1 and **II** for adjustment screw 2.

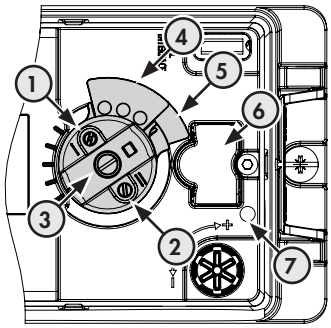

1 Adjustment screw 1
2 Adjustment screw 2
3 Locking screw
4 Tag 1
5 Tag 2
6 Proximity switches
7 Volume restriction Q (positioner hardware 2.00.xx only)

Fig. 7-1: *Adjusting the switching points*

The following applies to all adjustments:

➔ Always move the valve to the switching point from the mid-position (50 %) on adjusting or checking the switching point.

➔ To guarantee the switching under all ambient conditions, adjust the switching point approx. 5 % before the mechanical stop (OPEN/CLOSED).

➔ Contact functions:

– Tag leaving the field: contact is closed

– Tag entering the field: contact is opened

7.6.1 Adjusting the CLOSED position

1. Initialize the positioner (see Chapter 7.4).
2. Move the valve using the manual mode to 5 % (read the value off the display).
3. Undo the locking screw (3).
4. Turn the adjustment screws to adjust the tags until they leave or enter the field causing the switching amplifier to respond. You can measure the switching voltage for checking purposes.
5. Keep hold of the rotary knob and tighten the locking screw (3) (tightening torque 0.9 ±0.1 Nm).
6. Move the valve away from the switching position and check whether the output signal changes.
7. Move the valve back to the switching position and check the switching point.

7.6.2 Adjusting the OPEN position

1. Initialize the positioner (see Chapter 7.4).
2. Move the valve using the manual mode to 95 % (read the value off the display).
3. Undo the locking screw (3).
4. Turn the adjustment screws to adjust the tags until they leave or enter the field causing the switching amplifier to respond. You can measure the switching voltage for checking purposes.
5. Keep hold of the rotary knob and tighten the locking screw (3) (tightening torque 0.9 ±0.1 Nm).

6. Move the valve away from the switching position and check whether the output signal changes.
7. Move the valve back to the switching position and check the switching point.

8 Operation

The work described in this chapter is to be performed only by personnel appropriately qualified to carry out such tasks.

⚠ DANGER

Risk of fatal injury due to the ignition of an explosive atmosphere.

➔ *Observe EN 60079-14 (VDE 0165, Part 1) for work on the positioner in potentially explosive atmospheres.*

➔ *Work in potentially explosive atmospheres is to be performed only by personnel who has undergone special training or instructions or who is authorized to work on explosion-protected devices in hazardous areas.*

⚠ WARNING

Crush hazard arising from moving parts on the valve.

➔ *Do not touch any moving valve parts while the control valve is in operation.*

➔ *Before performing any mounting or installation work on the positioner, put the control valve out of operation by disconnecting and locking the supply air and control signal.*

➔ *Do not impede the movement of the actuator and plug stem by inserting objects into the yoke.*

8.1 Adjusting the volume restriction Q

The volume restriction Q serves to adapt the air output capacity to the size of the actuator:

– Actuators with a **transit time <1 s**, e.g. linear actuators with an effective area smaller than 240 cm², require a restricted air flow rate (MIN).

– Actuators with a **transit time ≥1 s** do not require the air flow rate to be restricted (MAX).

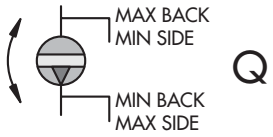

Signal pressure \ Transit time	<1 s	≥1 s
Connection at the side	MIN SIDE	MAX SIDE
Connection at the back	MIN BACK	MAX BACK

* Intermediate settings are not permitted.

Fig. 8-2: *Volume restriction Q*

The position of volume restriction Q also depends on how the signal pressure is routed at the actuator in **SAMSON actuators**:

'SIDE' inscription

- For actuators with a signal pressure connection at the side, e.g. Type 3271-5
- For actuators from other manufacturers

'BACK' inscription

- For actuators with a signal pressure connection at the back, e.g. Type 3277-5

NOTICE

Malfunction due to changed start-up settings.

Initialize an initialized positioner again after the position of the volume restriction has been changed.

8.2 Changing the reading direction of the display

The display reading direction can be rotated by 180°. If the displayed data appear upside down, proceed as follows:



1. Turn ⊛ until Code ***P1*** appears.
2. Press ⊛ to confirm the selected code. ***P1*** blinks.
3. Turn ⊛ until the display is set in the desired direction.
4. Press ⊛ to confirm selected reading direction.

8.3 Changing operating mode

8.3.1 Closed-loop operation (automatic mode)

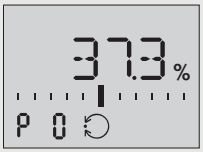

After initialization has been completed successfully once, the positioner is in closed-loop operation (automatic mode). This is indicated by the ↻ icon.

8.3.2 Manual mode

The valve position can be moved manually (Code ***P25***):

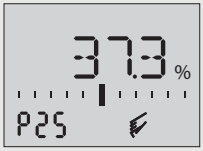

➔ Enable configuration (Code P2).

1. Turn ⊛ until Code ***P25*** appears.
2. Press ⊛ and hold for 3 s (reading: ***3*** ... ***2*** ... ***1***).

➔ ***P25*** blinks. The positioner changes to the manual mode (indicated by the manual mode icon).

➔ The manual set point is indicated on the display of an initialized positioner.

➔ The lever position in degrees in relation to the mid-position is indicated on the display of a positioner that has ***not*** been initialized.

➔ Turn ⊛ to move the valve manually.

➔ Initialized positioner: the manual set point is adjusted in steps of 0.1 %. You can move the valve controlled within its range.

➔ Positioner that has ***not*** been initialized: the valve is only moved in one direction uncontrolled by adjusting the manual set point.

➔ Press ⊛ to exit manual mode.

i ***Note***

The Manual mode function can only be exited as described or by interrupting the electrical supply (cold start).

8.4 Performing zero calibration

⚠ WARNING

Risk of personal injury due to moving parts on the valve.

➔ *During zero calibration, do not insert hands or fingers into the valve yoke and do not touch any moving valve parts.*

➔ *Do not block the actuator stem.*

In case of inconsistencies in the closing position of the valve, e.g. with soft-seated plugs, it might be necessary to recalibrate zero using Code ***P24***.

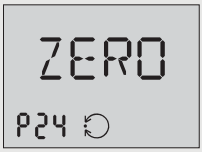

Start zero calibration:

➔ Enable configuration (Code P2).

1. Turn ⊛ until Code ***P24*** appears.
2. Press ⊛ and hold for 3 s (reading: ***3*** ... ***2*** ... ***1***).

➔ Zero calibration starts. ***P24*** and ***ZERO*** blink during the calibration procedure. The positioner moves the control valve to the CLOSED position and recalibrates the internal electric zero point.

➔ When the zero calibration has been successfully completed, the positioner changes to closed-loop operation.

Canceling zero calibration

Zero calibration can be canceled:

Cancel zero calibration:

1. During zero calibration, press ⊛. Code ***P24*** blinks.
2. Press ⊛ again. Zero calibration is canceled.

➔ The positioner changes to closed-loop operation without performing a zero calibration. A new zero calibration can be started directly afterwards.

8.5 Resetting the positioner

NOTICE

The process is disturbed by the movement of the actuator stem.

➔ *Do not reset the positioner while the process is running. First isolate the plant by closing the shut-off valves.*

A reset causes an initialization to be undone and all parameters settings are reset to the default settings (see code list in Appendix A).

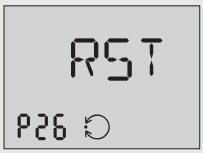

➔ Enable configuration (Code P2).

1. Turn ⊛ until Code ***P26*** appears.
2. Press ⊛ and hold for 3 s (reading: ***3*** ... ***2*** ... ***1***).

➔ The reading changes to Code ***P0.*** The reset procedure is completed.

➔ The fault indication icon is displayed since the positioner needs to be re-initialized.

➔ The ***E2*** error code is displayed.

8.6 Restarting the positioner (boot)

NOTICE

The process is disturbed by the movement of the actuator stem.

➔ *Do not restart the positioner while the process is running. First isolate the plant by closing the shut-off valves.*

A restart causes the positioner to be briefly switched off and on again. Calibration values remain saved. A restart is necessary, for example after a firmware update.



➔ Enable configuration (Code P2).

1. Turn ⊛ until Code ***P27*** appears.
2. Press ⊛ and hold for 3 s (reading: ***3*** ... ***2*** ... ***1***).

➔ The valve moves briefly to the fail-safe position and directly back again to the position where the valve was before the positioner was restarted.

➔ The reading changes to Code ***P0.*** The reset procedure is completed.

9 Malfunctions

⚠ DANGER

Risk of fatal injury due to the ignition of an explosive atmosphere.

➔ *Observe EN 60079-14 (VDE 0165, Part 1) for work on the positioner in potentially explosive atmospheres.*

➔ *Work in potentially explosive atmospheres is to be performed only by personnel who has undergone special training or instructions or who is authorized to work on explosion-protected devices in hazardous areas.*

⚠ DANGER

Risk of bursting in the pneumatic actuator due to the use of a fail-in-place module.

Before working on the positioner, actuator or any other valve accessories:

➔ *Depressurize all plant sections concerned and the actuator. Release any stored energy.*

⚠ WARNING

Crush hazard arising from actuator and plug stem moving.

➔ *Do not insert hands or finger into the yoke while the air supply is connected to the positioner.*

➔ *Before working on the positioner, disconnect and lock the pneumatic air supply.*

➔ *Do not impede the movement of the actuator and plug stem by inserting objects into the yoke.*

⚠ WARNING

Sudden loud noise when the pneumatic actuator vents.

➔ *Wear hearing protection when working near the valve.*

Malfunctions are indicated on the display by the fault indication icon. Navigate past Code ***P0*** or ***P28***. The respective error codes ***E0*** to ***E15*** are displayed together with the ***ERR*** reading. Refer to the error code list in Chapter 9.1 for the cause of the errors and the recommended action.

In TROVIS-VIEW, an additional icon for status classification is shown together with the error code (see Table 9-1 on page 9-3).

i *Note*

Contact 's After-sales Service for malfunctions not listed in Chapter 9.1.

Example:
If, for instance, a travel has been entered in Code ***P5*** (nominal range), which is larger than the maximum valve travel possible, the rated travel cannot be reached during initialization process. In this case, initialization is canceled. Closed-loop operation is continued if the positioner has already been initialized. When the positioner has not yet been initialized, the valve returns to the fail-safe position (indicated by the **S** icon). After Code ***P0*** or ***P28*** the error codes ***E2*** (positioner not initialized) and ***E6*** (rated travel not reached) are displayed.

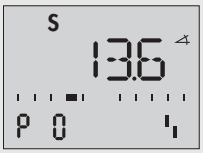

Display of the fault indication:
– *Fault indication icon appears.*
– *Valve moves to the fail-safe position* (indicated by the **S** icon).

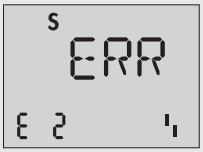

E2 error code: Initialization canceled.

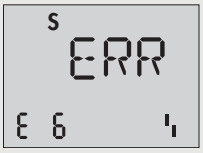

E6 error code: Rated travel not achieved.

The nominal range (Code P5) must be changed and the positioner re-initialized to remedy this problem.

9.1 Troubleshooting

The errors listed in Table 9-2 are assigned to error classes:
– **Error class 1:** No operation possible
– **Error class 2:** Manual operation only possible
– **Error class 3:** Manual operation and closed-loop control possible

In TROVIS-VIEW, an additional icon for status classification is shown together with the error (see Table 9-1).

Table 9-1: *Icon showing status classification*

Icon	Meaning
	Failure
	Function check
	Out of specification
	Maintenance demanded
	No message

Table 9-2: *Troubleshooting*

Code	Status	Description	Cause/recommended action	Class
E0		**Zero error** (operational error)	Only with tight-closing function ***P13*** (set point cutoff decrease set to **ON**). The zero point has shifted by more than 5 % compared to initialization. The error may arise, for example when the valve seat trim is worn. **Note:** During initialization, the E0 error code indicates that the sized actuator is too weak. The thrust is insufficient to close the valve properly.	3
		Recommended action	Check the valve and positioner attachment as well as the supply pressure. If the positioner is mounted correctly, perform a zero calibration using Code ***P24*** (see the 'Start-up and configuration' chapter). **Error code can be cleared (see Chapter 9.1.1).**	
E1		**Displayed and INIT values are not identical** (operational error)	Adjusted and displayed values are not identical to the INIT values as the parameters (Code ***P3***, ***P4*** or ***P5***) were changed after initialization.	3
		Recommended action	Reset parameters or re-initialize positioner.	
E2		**Positioner not initialized**	The positioner needs to be initialized.	2
		Recommended action	Set parameters and initialize the positioner using Code ***P23***.	

Code	Status	Description	Cause/recommended action	Class
E3		**K_P setting** (initialization error)	Positioner hunts. Gain too high.	2
		Recommended action	Limit the gain K_P (Code ***P9***). Re-initialize the positioner. Possibly use a volume restriction.	
E4		**Transit time too short** (initialization error)	Actuator transit times detected during initialization are too short making optimal positioner tuning impossible. Minimum transit times: K_p = 25: ≥150 ms K_p = 50 to 100: ≥380 ms	2
		Recommended action	Check piping and re-initialize the device. Possibly use a volume restriction or reduce gain K_P.	
E5		**Standstill detection is not possible** (initialization error)	Supply pressure varies. Mounting incorrect.	2
		Recommended action	Check supply air and positioner attachment. Re-initialize the positioner.	
E6		**Travel is not achieved during initialization** (initialization error)	Supply pressure is too low, actuator leaks, incorrect travel adjusted or pressure limit function activated. When MAX is selected for Code ***P5*** (nominal range): The measuring span of the lever is too small (incorrect lever, incorrect pin position). Initialization is canceled when the angle of rotation of the positioner shaft is smaller than 11°.	2
		Recommended action	Check supply air, positioner attachment, lever, pin position and settings. Re-initialize the positioner.	
E7		**Actuator does not move** (initialization error)	No supply air, mounting blocked.	2
		Recommended action	Check supply air, positioner attachment and mA input signal. Re-initialize the positioner.	
E8		**Travel signal at lower/ upper limit**	Wrong pin position, wrong lever, wrong attachment direction when NAMUR attachment is used.	1
		Recommended action	Reset error code (see Chapter 9.1.1). Check positioner mounting and re-initialize the positioner.	
E9 to E15		**Device error (internal)**	Contact SAMSON's After-sales Service.	1/3

Table 9-3: *Further troubleshooting*

Error description	Action
No reading on the display	➔ Check electrical connection and power supply/ electrical signal.
Actuator moves too slowly	➔ Check the supply pressure. ➔ Check the cross-section of the piping and screw fittings. ➔ Check the configuration of the mounting parts.
Actuator moves in the wrong direction.	➔ Check the direction of action (Code ***P8***). ➔ Check the characteristic setting. ➔ Check piping. ➔ Check the configuration of the mounting parts.
Strong leakage from the device.	➔ Check seals.

9.1.1 Clearing error codes

The ***E0*** and ***E3*** to ***E8*** error codes can be cleared as follows:

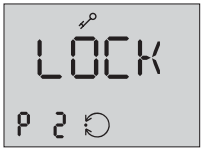

1. Turn ⊛ until Code ***P2*** appears.
2. Press ⊛ to confirm the selected code. ***P2*** blinks.
3. Turn ⊛ until ***OPEN*** appears.
4. Press ⊛ to deactivate the locking.



5. Turn ⊛ to select the error code.
6. Press ⊛, ESC is displayed. The error code blinks.
7. Turn ⊛ until ***RST*** appears.
8. Press ⊛ to clear the error.

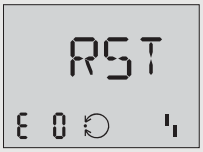

➔ Clearing can be canceled by pressing the rotary pushbutton while ***ESC*** is displayed.

9.2 Emergency action

Upon failure of the air supply and/or electrical signal, the positioner vents the actuator, causing the valve to move to the fail-safe position determined by the actuator. Plant operators are responsible for emergency action to be taken in the plant.

Tip

Emergency action in the event of valve failure is described in the associated valve documentation.

10 Servicing

The work described in this chapter is to be performed only by personnel appropriately qualified to carry out such tasks.

⚠ DANGER

Risk of fatal injury due to the ignition of an explosive atmosphere.

➔ *Observe EN 60079-14 (VDE 0165, Part 1) for work on the positioner in potentially explosive atmospheres.*

➔ *Work in potentially explosive atmospheres is to be performed only by personnel who has undergone special training or instructions or who is authorized to work on explosion-protected devices in hazardous areas.*

⚠ WARNING

Crush hazard arising from actuator and plug stem moving.

➔ *Do not insert hands or finger into the yoke while the air supply is connected to the positioner.*

➔ *Before working on the positioner, disconnect and lock the pneumatic air supply.*

➔ *Do not impede the movement of the actuator and plug stem by inserting objects into the yoke.*

⚠ WARNING

Sudden loud noise when the pneumatic actuator vents.

➔ *Wear hearing protection when working near the valve.*

The positioner was checked by SAMSON before it left the factory.

– The product warranty becomes void if service or repair work not described in these instructions is performed without prior agreement by SAMSON's After-sales Service.

– Only use original spare parts by SAMSON, which comply with the original specifications.

10.1 Cleaning the cover window

The window is made of Makrolon® and will be damaged when cleaned with abrasive cleaning agents or agents containing solvents. To avoid damage:

➔ Do not rub the window dry.

➔ Do not use any cleaning agents containing chlorine or alcohol or abrasive cleaning agents.

➔ Use a non-abrasive, soft cloth for cleaning.

10.2 Firmware updates

Contact your local SAMSON engineering and sales office or subsidiary (▶ www.samsongroup.com > About SAMSON > Sales sites) to request a firmware update.

Required specifications

Please submit the following details on requesting a firmware update:

- Type
- Serial number
- Configuration ID
- Current firmware version
- Required firmware version

10.3 Periodic inspection and testing of the positioner

SAMSON recommends inspection and testing according to Table 10-1 at the minimum.

Table 10-1: *Recommended inspection and testing*

Inspection and testing	Action to be taken in the event of a negative result
Check the markings, labels and nameplates on the positioner for their readability and completeness.	Contact SAMSON when nameplates or labels are damaged, missing or incorrect to renew them.
	Clean any inscriptions that are covered with dirt and are illegible.
Check the positioner to ensure that it is mounted firmly.	Tighten the any loose mounting screws.
Check the pneumatic connections.	Tighten any loose male connectors of the screw fittings.
	Renew any air pipes or hoses that leak.
Check the power supply wires.	Tighten any loose cable glands.
	Make sure that the stranded wires are pushed into the terminal and tighten any loose screws on the the terminals.
	Renew damaged wires.
Check error messages on the display (indicated by the fault alarm icon).	Troubleshooting (see the 'Malfunctions' chapter).

11 Decommissioning

The work described in this chapter is to be performed only by personnel appropriately qualified to carry out such tasks.

⚠ DANGER

Risk of fatal injury due to the ignition of an explosive atmosphere.

➔ *Observe EN 60079-14 (VDE 0165, Part 1) for work on the positioner in potentially explosive atmospheres.*

➔ *Work in potentially explosive atmospheres is to be performed only by personnel who has undergone special training or instructions or who is authorized to work on explosion-protected devices in hazardous areas.*

⚠ WARNING

Sudden loud noise when the pneumatic actuator vents.

➔ *Wear hearing protection when working near the valve.*

❗ *NOTICE*

Interrupting closed-loop control will disturb the process.

➔ *Do not mount or service the positioner while the process is running and only after isolating the plant by closing the shut-off valves.*

To put the positioner out of operation, proceed as follows:

1. Disconnect and lock the air supply and signal pressure.
2. Open the positioner cover and disconnect the wires for the control signal.

12 Removal

The work described in this chapter is to be performed only by personnel appropriately qualified to carry out such tasks.

⚠ DANGER

Risk of fatal injury due to the ignition of an explosive atmosphere.

➔ *Observe EN 60079-14 (VDE 0165, Part 1) for work on the positioner in potentially explosive atmospheres.*

➔ *Work in potentially explosive atmospheres is to be performed only by personnel who has undergone special training or instructions or who is authorized to work on explosion-protected devices in hazardous areas.*

1. Put the positioner out of operation (see the 'Decommissioning' chapter).
2. Disconnect the wires for the control signal from the positioner.
3. Disconnect the lines for supply air and signal pressure (not required for direct attachment using a connection block).
4. To remove the positioner, loosen the two fastening screws on the positioner.

13 Repairs

A defective positioner must be repaired or replaced.

NOTICE

Risk of positioner damage due to incorrect service or repair work.

➔ *Do not perform any repair work on your own.*

➔ *Contact SAMSON's After-sales Service for service and repair work.*

13.1 Servicing explosion-protected devices

If a part of the device on which the explosion protection is based needs to be serviced, the device must not be put back into operation until a qualified inspector has assessed it according to explosion protection requirements, has issued an inspection certificate, or given the device a mark of conformity. Inspection by a qualified inspector is not required if the manufacturer performs a routine test on the device before putting it back into operation and the passing of the routine test is documented by attaching a mark of conformity to the device. Replace explosion-protected components only with original, routine-tested components by the manufacturer.

Devices that have already been operated outside hazardous areas and are intended for future use inside hazardous areas must comply with the safety requirements placed on serviced devices. Before being operated inside hazardous areas, test the devices according to the specifications for servicing explosion-protected devices.

13.2 Returning devices to SAMSON

Defective positioners can be returned to SAMSON for repair.

Proceed as follows to return devices to SAMSON:

1. Put the positioner out of operation (see the 'Decommissioning' chapter).
2. Remove the positioner (see the 'Removal' chapter).
3. Proceed as described on the Returning goods page of our website
   ▶ www.samsongroup.com > Service > After-sales Service > Returning goods

14 Disposal

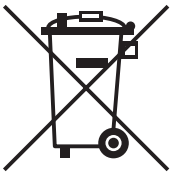

SAMSON is a producer registered in Europe, agency in charge ▶ https://www.ewrn.org/national-registers/national-registers.
WEEE reg. no.:
DE 62194439/FR 025665

➔ Observe local, national and international refuse regulations.

➔ Do not dispose of components, lubricants and hazardous substances together with your other household waste.

Note

SAMSON can provide you with a recycling passport according to PAS 1049 on request. Simply e-mail us at aftersalesservice@samsongroup.com giving details of your company address.

Tip

On request, SAMSON can appoint a service provider to dismantle and recycle the product.

15 Certificates

The following certificates are included on the next pages:

- EU declaration of conformity for TROVIS 3730-1
- EU declaration of conformity for TROVIS 3730-1-110, -510, -810, -850
- EU type examination certificate for TROVIS 3730-1-110, -510, -810, -850
- FM certificate for TROVIS 3730-1-130
- IECEx certificate for TROVIS 3730-1-111, -511, -811, -851
- TR CU certificate for TROVIS 3730-1
- Excerpt from TR CU certificate for TROVIS 3730-1-113, -513

The certificates shown were up to date at the time of publishing. The latest certificates can be found on our website:
▶ www.samsongroup.com > Products > Valve accessories > TROVIS 3730-1

EU Konformitätserklärung / EU Declaration of Conformity / Déclaration UE de conformité

Die alleinige Verantwortung für die Ausstellung dieser Konformitätserklärung trägt der Hersteller/
This declaration of conformity is issued under the sole responsibility of the manufacturer/
La présente déclaration de conformité est établie sous la seule responsabilité du fabricant.

Für das folgende Produkt / For the following product / Nous certifions que le produit

Elektropneumatischer Stellungsregler / Electropneumatic Positioner / Positionneur électropneumatique
TROVIS 3730-1-...

wird die Konformität mit den einschlägigen Harmonisierungsrechtsvorschriften der Union bestätigt /
the conformity with the relevant Union harmonisation legislation is declared with/
est conforme à la législation d'harmonisation de l'Union applicable selon les normes:

EMC 2014/30/EU	EN 61000-6-2:2005, EN 61000-6-3:2007 +A1:2011, EN 61326-1:2013
RoHS 2011/65/EU	EN 50581:2012

Hersteller / Manufacturer / Fabricant:

SAMSON AKTIENGESELLSCHAFT
Weismüllerstraße 3
D-60314 Frankfurt am Main
Deutschland/Germany/Allemagne

Frankfurt / Francfort, 2018-11-26
Im Namen des Herstellers/ On behalf of the Manufacturer/ Au nom du fabricant.

i.V. ppa.

Dr. Julian Fuchs
Zentralabteilungsleiter/Head of Department/Chef du département
Entwicklung Ventilanbaugeräte und Messtechnik
Development Valve Attachments and Measurement Technologies

i.V. S. Schäfer

Dipl.-Ing. Silke Bianca Schäfer
Total Quality Management/
Management par la qualité totale

ce_trovis-3730-1-_de,en,fra_rev08.pdf

EU Konformitätserklärung / EU Declaration of Conformity / Déclaration UE de conformité

Die alleinige Verantwortung für die Ausstellung dieser Konformitätserklärung trägt der Hersteller/
This declaration of conformity is issued under the sole responsibility of the manufacturer/
La présente déclaration de conformité est établie sous la seule responsabilité du fabricant.

Für das folgende Produkt / For the following product / Nous certifions que le produit

Elektropneumatischer Stellungsregler / Electropneumatic Positioner / Positionneur électropneumatique
TROVIS 3730-1-110, -510, -810, -850

entsprechend der EU-Baumusterprüfbescheingung PTB 18 ATEX 2001 ausgestellt von der/
according to the EU Type Examination PTB 18 ATEX 2001 issued by/
établi selon le certificat CE d'essais sur échantillons PTB 18 ATEX 2001 émis par:

Physikalisch Technische Bundesanstalt
Bundesallee 100
D-38116 Braunschweig
Benannte Stelle/Notified Body/Organisme notifié 0102

wird die Konformität mit den einschlägigen Harmonisierungsrechtsvorschriften der Union bestätigt /
the conformity with the relevant Union harmonisation legislation is declared with/
est conforme à la législation d'harmonisation de l'Union applicable selon les normes:

EMC 2014/30/EU	EN 61000-6-2:2005, EN 61000-6-3:2007 +A1:2011, EN 61326-1:2013
Explosion Protection 2014/34/EU	EN 60079-0: 2018, EN 60079-11: 2012, EN 60079-15: 2010, EN 60079-31: 2014
RoHS 2011/65/EU	EN 50581:2012

Hersteller / Manufacturer / Fabricant:

SAMSON AKTIENGESELLSCHAFT
Weismüllerstraße 3
D-60314 Frankfurt am Main
Deutschland/Germany/Allemagne

Frankfurt / Francfort, 2018-11-26

Im Namen des Herstellers/ On behalf of the Manufacturer/ Au nom du fabricant.

i.V. Dr. Fuchs

Dr. Julian Fuchs
Zentralabteilungsleiter/Head of Department/Chef du département
Entwicklung Ventilanbaugeräte und Messtechnik
Development Valve Attachments and Measurement Technologies

i.V. S. Schäfer

Dipl.-Ing. Silke Bianca Schäfer
Total Quality Management/
Management par la qualité totale

ce_trovis-3730-1-110-510-810-850_de_en_fra_rev08.pdf

Physikalisch-Technische Bundesanstalt
Braunschweig und Berlin
Nationales Metrologieinstitut

(1) EU-TYPE EXAMINATION CERTIFICATE

(Translation)

(2) Equipment or Protective Systems Intended for Use in Potentially Explosive Atmospheres - **Directive 2014/34/EU**

(3) EU-Type Examination Certificate Number:

PTB 18 ATEX 2001 **Issue: 0**

(4) Product: Positioner TROVIS 3730-1-...

(5) Manufacturer: SAMSON AG Mess- und Regeltechnik

(6) Address: Weismüllerstraße 3, 60314 Frankfurt, Germany

(7) This product and any acceptable variation thereto is specified in the schedule to this certificate and the documents therein referred to.

(8) The Physikalisch-Technische Bundesanstalt, notified body No. 0102 in accordance with Article 17 of the Directive 2014/34/EU of the European Parliament and of the Council, dated 26 February 2014, certifies that this product has been found to comply with the Essential Health and Safety Requirements relating to the design and construction of products intended for use in potentially explosive atmospheres, given in Annex II to the Directive.

The examination and test results are recorded in the confidential Test Report PTB Ex 18-28026.

(9) Compliance with the Essential Health and Safety Requirements has been assured by compliance with:

EN 60079-0:2018 **EN 60079-11:2012** **EN 60079-15:2010** **EN 60079-31:2014**

(10) If the sign "X" is placed after the certificate number, it indicates that the product is subject to the Specific Conditions of Use specified in the schedule to this certificate.

(11) This EU-Type Examination Certificate relates only to the design and construction of the specified product in accordance to the Directive 2014/34/EU. Further requirements of the Directive apply to the manufacturing process and supply of this product. These are not covered by this certificate.

(12) The marking of the product shall include the following:

II 2 G Ex ia IIC T4/T6 Gb	**and**	**II 2 D Ex ia IIIC T85 °C Db**	**or**
II 2 D Ex tb IIIC T85 °C Db			**or**
II 3 G Ex nA IIC T4/T6 Gc	**and**	**II 2 D Ex tb IIIC T85 °C Db**	**or**
II 3 G Ex nA IIC T4/T6 Gc			

Konformitätsbewertungsstelle Sektor Explosionsschutz Braunschweig, October 25, 2018
On behalf of PTB:

Dr.-Ing. F. Lienesch
Direktor und Professor

ZSEx001e c

sheet 1/4

EU-Type Examination Certificates without signature and official stamp shall not be valid. The certificates may be circulated only without alteration. Extracts or alterations are subject to approval by the Physikalisch-Technische Bundesanstalt.
In case of dispute, the German text shall prevail.

Physikalisch-Technische Bundesanstalt • Bundesallee 100 • 38116 Braunschweig • GERMANY

(13) # SCHEDULE

(14) **EU-Type Examination Certificate Number PTB 18 ATEX 2001, Issue: 0**

(15) Description of Product

The positioner of type TROVIS 3730-1-... is a single-acting positioner intended for the installation on pneumatic control valves.

The positioner of type TROVIS 3730-1-... max be manufactured and operated according to the test documents listed in the test report.

The thermal and electrical data are represented as follows:

For general relationship between temperature class and the permissible ambient temperature ranges, reference is made to the following tables:

Applies to type of protection: „ia"

Gas group	Temperature class	Permissible ambient temperature range	Permissible ambient temperature range *)
IIC	T6	-40 °C ... 55 °C	-40 °C ... 45 °C
	T4	-40 °C ... 80 °C	-40 °C ... 70 °C

*) For the optional operation with inductive limit contact, type 3

Applies to type of protection: „nA"

Gas group	Temperature class	Permissible ambient temperature range
IIC	T6	-40 °C ... 55 °C
	T4	-40 °C ... 80 °C

Applies to type of protection „ia"

Dust group	Max. surface temperature	Permissible ambient temperature range
IIIC	T 85 °C	-40 °C ... 55 °C

EU-Type Examination Certificates without signature and official stamp shall not be valid. The certificates may be circulated only without alteration. Extracts or alterations are subject to approval by the Physikalisch-Technische Bundesanstalt.
In case of dispute, the German text shall prevail.

Physikalisch-Technische Bundesanstalt • Bundesallee 100 • 38116 Braunschweig • GERMANY

SCHEDULE TO EU-TYPE EXAMINATION CERTIFICATE PTB 18 ATEX 2001 , Issue: 0

Applies to type of protection „tb"

Dust group	Max. surface temperature	Permissible ambient temperature range
IIIC	T 85 °C	-40 °C ... 70 °C

Electrical data for type of protection „ia":

Signal circuit
(terminals +11, -12)

type of protection Intrinsic Safety Ex ia IIC / IIIC only for connection to a certified intrinsically safe circuit

Maximum values:

U_i = 28 V
I_i = 115 mA
P_i = 1 W
C_i = 5 nF
L_i = negligible

Software-limit contacts
(terminals +45, -46, +55, -56)

type of protection Intrinsic Safety Ex ia IIC / IIIC only for connection to a certified intrinsically safe circuit

Maximum values:

U_i = 16 V
I_i = 52 mA
P_i = 169 mW
C_i = 15.9 nF
L_i = negligible

Limit contact, inductive
(terminals +41, -42, +51, -52)

type of protection Intrinsic Safety Ex ia IIC / IIIC only for connection to a certified intrinsically safe circuit

Maximum values:

Type 2			Type 3		
U_i =	16	V	U_i =	16	V
I_i =	25	mA	I_i =	52	mA
P_i =	64	mW	P_i =	169	mW
C_i =	35	nF	C_i =	35	nF
L_i =	100	µH	L_i =	100	µH

EU-Type Examination Certificates without signature and official stamp shall not be valid. The certificates may be circulated only without alteration. Extracts or alterations are subject to approval by the Physikalisch-Technische Bundesanstalt.
In case of dispute, the German text shall prevail.

Physikalisch-Technische Bundesanstalt • Bundesallee 100 • 38116 Braunschweig • GERMANY

SCHEDULE TO EU-TYPE EXAMINATION CERTIFICATE PTB 18 ATEX 2001 , Issue: 0

Repeater (terminals +31, -32)	type of protection Intrinsic Safety Ex ia IIC / IIIC only for connection to a certified intrinsically safe circuit Maximum values: U_i = 28 V I_i = 115 mA P_i = 1 W C_i = 5 nF L_i = negligible

Electrical data for type of protection „nA" and „tb":

Signal circuit (terminals +11, -12)	I_N = 4 … 20 mA; U_N = 6.5 V; P_N = 140 mW
Software-limit contacts (terminals +45, -46, +55, -56)	U_N = 8.2 V; R_i = 1 kΩ; P_N = 17 mW
Limit contact, inductive (terminals +41, -42, +51, -52)	U_N = 8.2 V; R_i = 1 kΩ; P_N = 17 mW
Repeater (terminals +31, -32)	U_N = 24 V; P_N = 518 mW

(16) Test Report PTB Ex 18-28026

(17) Specific conditions of use

(18) Essential health and safety requirements

Met by compliance with the aforementioned standards.

Konformitätsbewertungsstelle, Sektor Explosionsschutz
On behalf of PTB

Braunschweig, October 25, 2018

Dr.-Ing. F. Lienesch
Direktor und Professor

EU-Type Examination Certificates without signature and official stamp shall not be valid. The certificates may be circulated only without alteration. Extracts or alterations are subject to approval by the Physikalisch-Technische Bundesanstalt.
In case of dispute, the German text shall prevail.

Physikalisch-Technische Bundesanstalt • Bundesallee 100 • 38116 Braunschweig • GERMANY

CERTIFICATE OF CONFORMITY

1. **HAZARDOUS (CLASSIFIED) LOCATION ELECTRICAL EQUIPMENT PER US REQUIREMENTS**
2. **Certificate No:** **FM21US0096**
3. **Equipment:** **Type 3730-1 series TROVIS HART Positioner**
   (Type Reference and Name)
4. **Name of Listing Company:** **Samson AG**
5. **Address of Listing Company:** **Weismuellerstrasse 3**
   Postfach 101901
   Frankfurt D60314
   Germany
6. The examination and test results are recorded in confidential report number:

   PR459607 dated 18th October 2022
7. FM Approvals LLC, certifies that the equipment described has been found to comply with the following Approval standards and other documents:

   FM Class 3600:2022, FM Class 3610:2021, FM Class 3611:2021, FM Class 3810:2021, ANSI/ISA 60079-0:2020, ANSI/UL 60079-11:2018, ANSI/UL 60079-31:2015, ANSI/ISA 61010-1:2012, ANSI/UL 121201:2019, ANSI/IEC 60529:2020, NEMA 250:2008
8. If the sign 'X' is placed after the certificate number, it indicates that the equipment is subject to specific conditions of use specified in the schedule to this certificate.

Certificate issued by:

J.E. Marquedant
VP, Manager - Electrical Systems

18 October 2022
Date

To verify the availability of the Approved product, please refer to www.approvalguide.com

THIS CERTIFICATE MAY ONLY BE REPRODUCED IN ITS ENTIRETY AND WITHOUT CHANGE

FM Approvals LLC. 1151 Boston-Providence Turnpike, Norwood, MA 02062 USA
T: +1 (1) 781 762 4300 F: +1 (1) 781 762 9375 E-mail: information@fmapprovals.com www.fmapprovals.com

SCHEDULE

US Certificate Of Conformity No: FM21US0096

9. This certificate relates to the design, examination and testing of the products specified herein. The FM Approvals surveillance audit program has further determined that the manufacturing processes and quality control procedures in place are satisfactory to manufacture the product as examined, tested and Approved.

10. Equipment Ratings:

    Intrinsically Safe for Class I, II, III, Division 1, Groups A, B, C, D, E, F, and G hazardous (classified) locations in accordance with drawing EB 8484-1, Intrinsically Safe for Class I, Zone 1, Group IIC hazardous (classified) locations in accordance with drawing EB 8484-1; Nonincendive for Class I, II, III, Division 2, Groups A, B, C, D, F and G hazardous locations, indoors and outdoors (Type 4X, IP66) with an ambient temperature rating per the table in Section 12 below

11. The marking of the equipment shall include:

    IS Class I, II, III, Division 1, Groups A, B, C, D, E, F, G; T* Ta*

    IS Class I, Zone 1, AEx ia IIC T* Gb

    NI Class I, II, III, Division 2, Groups A, B, C, D, F and G; T* Ta*

    Type 4X; IP66

    For Entity and NIFW parameters – refer to document no. EB8484-1

    T* - See below

12. **Description of Equipment:**

    General – The TROVIS 3730-1 Positioner is a single acting positioner for attachment to pneumatic control valves. The positioner mainly consists of a non-contact travel sensor system, an i/p converter and the electronics with the microcontroller. The valve position is transmitted either as an angle of rotation or a travel to the pick-up lever, from there to the travel sensor and forwarded to the microcontroller. The PID algorithm in the microcontroller compares the valve position measured by the travel sensor to the 4 to 20 mA DC control signal issued by the control system after it has been converted by the AD converter. In case of a set point deviation, the i/p converter causes the actuator to be either vented or filled with air. As a result, the closure member of the valve is moved to the position determined by the reference variable. The pneumatic module is supplied with supply air and the flow rate of the module's output can be restricted by software

    Construction - The Type TROVIS 3730-1 Positioner mainly consists of the electronics part. The parts are assembled in an enclosure made of aluminium die cast or stainless-steel die cast. The enclosure has a cover with a polymeric inspection window. As an alternative to the polymeric material, the window can be made from aluminium. The enclosure has an ingress protection rating of Type 4X and IP66

THIS CERTIFICATE MAY ONLY BE REPRODUCED IN ITS ENTIRETY AND WITHOUT CHANGE

FM Approvals LLC. 1151 Boston-Providence Turnpike, Norwood, MA 02062 USA
T: +1 (1) 781 762 4300 F: +1 (1) 781 762 9375 E-mail: information@fmapprovals.com www.fmapprovals.com

SCHEDULE

US Certificate Of Conformity No: FM21US0096

Thermal Ratings:

The correlation between temperature class and permissible ambient temperature range T_a is shown in Table 2.

Table 2:

Temperature class	Permissible ambient temperature T_a
T4	-40 °C ≤ T_a ≤ + 80 °C
T6	-40 °C ≤ T_a ≤ + 55 °C

For operation with inductive limit switches used with I_{max}/I_i = 52 mA and Pi = 169 mW, the correlation between temperature class and permissible ambient temperature range is shown in Table 3.

Table 3:

Temperature class	Permissible ambient temperature T_a
T4	-40 °C ≤ T_a ≤ + 70 °C
T6	-40 °C ≤ T_a ≤ + 45 °C

Electrical Ratings:

Circuit	Signal circuit	Position transmitter	Inductive limit switches	Software limit switches
Circuit no.	1	2	3 and 4	5 and 6
Terminal no.	+11 / -12	+31 / -32	+41 / -42 and +51 / -52	+45 / -46 and +55 / -56
V_{max} or U_i	28 V	28 V	16 V	16 V
I_{max} or I_i	115 mA	115 mA	25 mA or 52 mA	52 mA
P_i	1 W	1 W	64 mW or 169 mW	169 mW
C_i	16.3 nF	11.1 nF	71.1 nF	12.2 nF
L_i	Negligible	Negligible	100 µH	Negligible
Rated values	I_N = 4 mA…20 mA	U_N = 24 V DC	* U_N = 8.2 V R_i = 1 kΩ	* U_N = 8.2 V R_i = 1 kΩ

THIS CERTIFICATE MAY ONLY BE REPRODUCED IN ITS ENTIRETY AND WITHOUT CHANGE

FM Approvals LLC. 1151 Boston-Providence Turnpike, Norwood, MA 02062 USA
T: +1 (1) 781 762 4300 F: +1 (1) 781 762 9375 E-mail: information@fmapprovals.com www.fmapprovals.com

SCHEDULE

US Certificate Of Conformity No: FM21US0096

Positioner TROVIS / 3730-1…HART
3730-1-1300efghijklmno

e = Slot B Options: 0, or 1
f = Slot C Options: 0, 2, 3 or 4
g = reserved: not safety relevant
h = Electrical connection: 0 or 1
i = Housing material: 0 or 1
j = Cover: 1 or 2
kl = Housing version: not safety relevant
m = Additional Approval: not safety relevant
n = Ship Approval: not safety relevant
o = Permissible ambient temperature: not safety relevant

13. **Specific Conditions of Use:**

None

14. **Test and Assessment Procedure and Conditions:**

This Certificate has been issued in accordance with FM Approvals US Certification Requirements.

15. **Schedule Drawings**

A copy of the technical documentation has been kept by FM Approvals.

16. **Certificate History**

Details of the supplements to this certificate are described below:

Date	Description
18th October 2022	Original Issue.

THIS CERTIFICATE MAY ONLY BE REPRODUCED IN ITS ENTIRETY AND WITHOUT CHANGE

FM Approvals LLC. 1151 Boston-Providence Turnpike, Norwood, MA 02062 USA
T: +1 (1) 781 762 4300 F: +1 (1) 781 762 9375 E-mail: information@fmapprovals.com www.fmapprovals.com

CERTIFICATE OF CONFORMITY

1. **HAZARDOUS LOCATION ELECTRICAL EQUIPMENT PER CANADIAN REQUIREMENTS**
2. **Certificate No:** **FM21CA0063**
3. **Equipment:** **Type 3730-1 series TROVIS HART Positioner**
   (Type Reference and Name)
4. **Name of Listing Company:** **Samson AG**
5. **Address of Listing Company:** **Weismuellerstrasse 3**
   Postfach 101901
   Frankfurt D60314
   Germany
6. The examination and test results are recorded in confidential report number:

   PR459607 dated 18th October 2022
7. FM Approvals LLC, certifies that the equipment described has been found to comply with the following Approval standards and other documents:

   CAN/CSA C22.2 No. 94:R2011, CAN/CSA-C22.2 No. 213:2017, CAN/CSA-C22.2 No. 60079-0:2019, CAN/CSA-C22.2 No. 60079-11:2014, CAN/CSA C22.2 No. 60079-31:2015, CAN/CSA-C22.2 No. 60529:2016, CAN/CSA-C22.2 No. 61010-1:2012
8. If the sign 'X' is placed after the certificate number, it indicates that the equipment is subject to specific conditions of use specified in the schedule to this certificate.

Certificate issued by:

J.E. Marquedant
VP, Manager - Electrical Systems

18 October 2022
Date

To verify the availability of the Approved product, please refer to www.approvalguide.com

THIS CERTIFICATE MAY ONLY BE REPRODUCED IN ITS ENTIRETY AND WITHOUT CHANGE

FM Approvals LLC. 1151 Boston-Providence Turnpike, Norwood, MA 02062 USA
T: +1 (1) 781 762 4300 F: +1 (1) 781 762 9375 E-mail: information@fmapprovals.com www.fmapprovals.com

SCHEDULE

Canadian Certificate Of Conformity No: FM21CA0063

9. This certificate relates to the design, examination and testing of the products specified herein. The FM Approvals surveillance audit program has further determined that the manufacturing processes and quality control procedures in place are satisfactory to manufacture the product as examined, tested and Approved.

10. Equipment Ratings:

Intrinsically Safe for Class I, II, III Division 1, Groups A, B, C, D, E, F, and G hazardous (classified) locations in accordance with drawing EB 8484-1 , Intrinsically Safe for Class I, Zone 1, Group IIC hazardous (classified) locations in accordance with drawing EB 8484-1; Nonincendive for Class I, II, III Division 2, Groups A, B, C, D, F, and G hazardous locations, indoors and outdoors (Type 4X, IP66) with an ambient temperature rating per the table in Section 12 below

11. The marking of the equipment shall include:

IS Class I, II, III, Division 1, Groups A, B, C, D, E, F, G; T* Ta*

Ex ia IIC T* Gb

NI Class I, II, III Division 2, Groups A, B, C, D, F, G; T* Ta*

Type 4X; IP66

For Entity and NIFW parameters – refer to document no. EB8484-1

T* - See below

12. **Description of Equipment:**

General – The TROVIS 3730-1 Positioner is a single acting positioner for attachment to pneumatic control valves. The positioner mainly consists of a non-contact travel sensor system, an i/p converter and the electronics with the microcontroller. The valve position is transmitted either as an angle of rotation or a travel to the pick-up lever, from there to the travel sensor and forwarded to the microcontroller. The PID algorithm in the microcontroller compares the valve position measured by the travel sensor to the 4 to 20 mA DC control signal issued by the control system after it has been converted by the AD converter. In case of a set point deviation, the i/p converter causes the actuator to be either vented or filled with air. As a result, the closure member of the valve is moved to the position determined by the reference variable. The pneumatic module is supplied with supply air and the flow rate of the module's output can be restricted by software

Construction - The Type TROVIS 3730-1 Positioner mainly consists of the electronics part. The parts are assembled in an enclosure made of aluminium die cast or stainless-steel die cast. The enclosure has a cover with a polymeric inspection window. As an alternative to the polymeric material, the window can be made from aluminium. The enclosure has an ingress protection rating of Type 4X and IP66

THIS CERTIFICATE MAY ONLY BE REPRODUCED IN ITS ENTIRETY AND WITHOUT CHANGE

SCHEDULE

Canadian Certificate Of Conformity No: FM21CA0063

Thermal Ratings:

The correlation between temperature class and permissible ambient temperature range T_a is shown in Table 2.

Table 2:

Temperature class	Permissible ambient temperature T_a
T4	-40 °C ≤ T_a ≤ + 80 °C
T6	-40 °C ≤ T_a ≤ + 55 °C

For operation with inductive limit switches used with I_{max}/I_i = 52 mA and Pi = 169 mW, the correlation between temperature class and permissible ambient temperature range is shown in Table 3.

Table 3:

Temperature class	Permissible ambient temperature T_a
T4	-40 °C ≤ T_a ≤ + 70 °C
T6	-40 °C ≤ T_a ≤ + 45 °C

Electrical Ratings:

Circuit	Signal circuit	Position transmitter	Inductive limit switches	Software limit switches
Circuit no.	1	2	3 and 4	5 and 6
Terminal no.	+11 / -12	+31 / -32	+41 / -42 and +51 / -52	+45 / -46 and +55 / -56
V_{max} or U_i	28 V	28 V	16 V	16 V
I_{max} or I_i	115 mA	115 mA	25 mA or 52 mA	52 mA
P_i	1 W	1 W	64 mW or 169 mW	169 mW
C_i	16.3 nF	11.1 nF	71.1 nF	12.2 nF
L_i	Negligible	Negligible	100 µH	Negligible
Rated values	I_N = 4 mA…20 mA	U_N = 24 V DC	* U_N = 8.2 V R_i = 1 kΩ	* U_N = 8.2 V R_i = 1 kΩ

THIS CERTIFICATE MAY ONLY BE REPRODUCED IN ITS ENTIRETY AND WITHOUT CHANGE

FM Approvals LLC. 1151 Boston-Providence Turnpike, Norwood, MA 02062 USA
T: +1 (1) 781 762 4300 F: +1 (1) 781 762 9375 E-mail: information@fmapprovals.com www.fmapprovals.com

SCHEDULE

Canadian Certificate Of Conformity No: FM21CA0063

Positioner TROVIS / 3730-1…HART
3730-1-1300efghijklmno

e = Slot B Options: 0, or 1
f = Slot C Options: 0, 2, 3 or 4
g = reserved: not safety relevant
h = Electrical connection: 0 or 1
i = Housing material: 0 or 1
j = Cover: 1 or 2
kl = Housing version: not safety relevant
m = Additional Approval: not safety relevant
n = Ship Approval: not safety relevant
o = Permissible ambient temperature: not safety relevant

13. **Specific Conditions of Use:**

None

14. **Test and Assessment Procedure and Conditions:**

This Certificate has been issued in accordance with FM Approvals Canadian Certification Scheme.

15. **Schedule Drawings**

A copy of the technical documentation has been kept by FM Approvals.

16. **Certificate History**

Details of the supplements to this certificate are described below:

Date	Description
18th October 2022	Original Issue.

THIS CERTIFICATE MAY ONLY BE REPRODUCED IN ITS ENTIRETY AND WITHOUT CHANGE

FM Approvals LLC. 1151 Boston-Providence Turnpike, Norwood, MA 02062 USA
T: +1 (1) 781 762 4300 F: +1 (1) 781 762 9375 E-mail: information@fmapprovals.com www.fmapprovals.com

Installation Manual for Apparatus certified by FM Approvals for use in Hazardous Classified Locations

Electrical rating of Intrinsically Safe / Non-Incendive Apparatus for installation in Hazardous Locations

Table 1: Maximum values

Circuit	Signal Circuit	Position Transmitter	Limit Switches Inductive	Limit Switches Software
Circuit No.	1	2	3 and 4	5 and 6
Terminal No.	+11 / -12	+31 / -32	+41 / -42 and +51 / -52	+45 / -46 and +55 / -56
V_{max} or U_i	28 V	28 V	16 V	16 V
I_{max} or I_i	115 mA	115 mA	25 mA or 52 mA	52 mA
P_i	1 W	1 W	64 mW or 169 mW	169 mW
C_i	16.3 nF	11.1 nF	71.1 nF	12.2 nF
L_i	negligible	negligible	100 µH	negligible
Rated values	I_N = 4 mA…20 mA	U_N = 24 V DC	* U_N = 8.2 V R_i = 1 kΩ	* U_N = 8.2 V R_i = 1 kΩ

* For connection to NAMUR switching amplifier acc. to IEC 60947-5-6

Note: Entity / Nonincendive Field Wiring Parameters must meet the following requirements:
U_0 or V_{OC} ≤ U_i or V_{max} / I_0 or I_{SC} ≤ I_i or I_{max} / P_0 ≤ P_i or P_{max}
C_a or C_O ≥ C_i + C_{Cable} / L_a or L_O ≥ L_i + L_{Cable}

The correlation between Temperature Class and permissible ambient temperature range T_a is shown in Table 2.

Table 2:

Temperature Class	Permissible ambient temperature T_a
T4	-40 °C ≤ T_a ≤ + 80 °C
T6	-40 °C ≤ T_a ≤ + 55 °C

For operation with Inductive Limit Switches (3793-130…..15 or 3793-130…..16) used with I_{max}/I_i = 52 mA and Pi = 169 mW the correlation between Temperature Class and permissible ambient temperature range is shown in Table 3.

Table 3:

Temperature Class	Permissible ambient temperature T_a
T4	-40 °C ≤ T_a ≤ + 70 °C
T6	-40 °C ≤ T_a ≤ + 45 °C

Intrinsically Safe when installed as specified in manufacturer´s Installation Manual.

FM approved for Hazardous Locations

Class I, Division 1 and 2, Groups A, B, C, D
Class II, Division 1, Groups E, F, G
Class III, Division 1

Class I, Zone 1, AEx ia IIC T4/T6

Enclosure Type 4X / IP 66

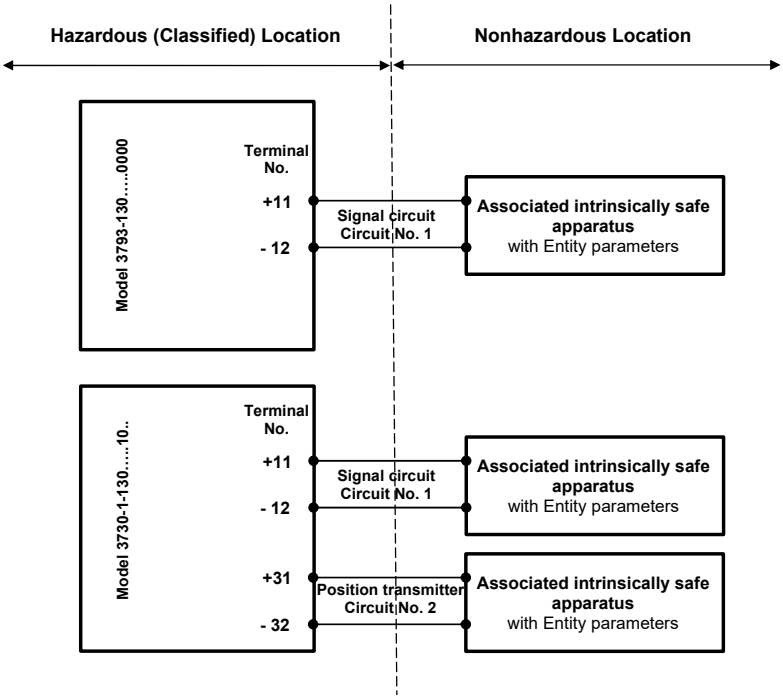

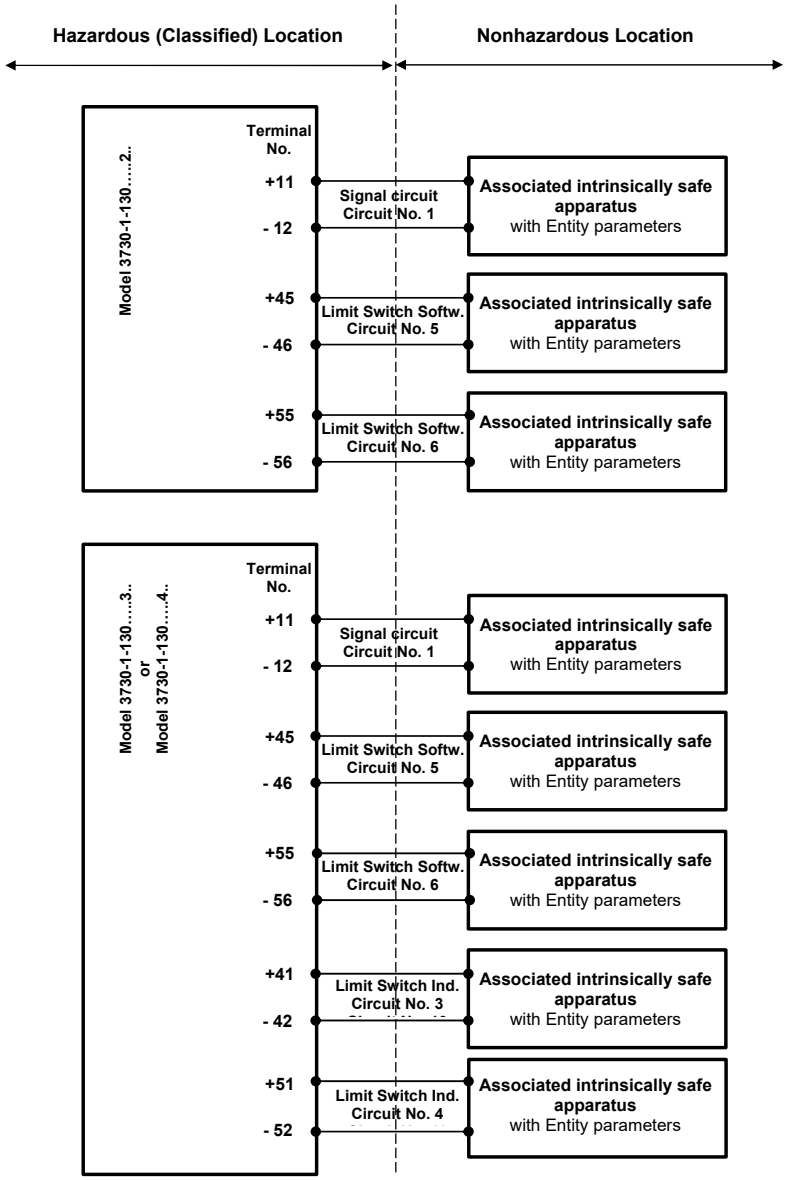
Hazardous (Classified) Location
Nonhazardous Location
Model 3730-1-130.....2..
Terminal No.
+11
- 12
Signal circuit Circuit No. 1
Associated intrinsically safe apparatus with Entity parameters
+45
- 46
Limit Switch Softw. Circuit No. 5
Associated intrinsically safe apparatus with Entity parameters
+55
- 56
Limit Switch Softw. Circuit No. 6
Associated intrinsically safe apparatus with Entity parameters
Model 3730-1-130.....3..
or
Model 3730-1-130.....4..
Terminal No.
+11
- 12
Signal circuit Circuit No. 1
Associated intrinsically safe apparatus with Entity parameters
+45
- 46
Limit Switch Softw. Circuit No. 5
Associated intrinsically safe apparatus with Entity parameters
+55
- 56
Limit Switch Softw. Circuit No. 6
Associated intrinsically safe apparatus with Entity parameters
+41
- 42
Limit Switch Ind. Circuit No. 3
Associated intrinsically safe apparatus with Entity parameters
+51
- 52
Limit Switch Ind. Circuit No. 4
Associated intrinsically safe apparatus with Entity parameters

Notes:

1. The apparatus may be installed in intrinsically safe and non-incendive field wiring circuits only when used in conjunction with certified intrinsically safe or non-incendive associated apparatus. For maximum values see Table 1 on page 1.
2. For the interconnection of intrinsically safe and associated intrinsically safe apparatus not specifically examined in combination as a system, the Entity Parameters must meet following requirements:

V_{OC} or U_0	≤	U_i or V_{max}
I_{SC} or I_0	≤	I_i or I_{max}
P_0	≤	P_i or P_{max}
C_a or C_O	≥	C_i + C_{Cable}
L_a or L_O	≥	L_i + L_{Cable}

3. The installation must be in accordance with Canadian Electrical Code C.E.C. Part 1.
4. The installation must be in accordance with the National Electrical Code NFPA 70 and ANSI/ISA RP 12.06.01.
5. Use only supply wires suitable for 5 °C above surrounding temperature.
6. Substitution of components may impair intrinsic safety.
7. The maximum nonhazardous area voltage must not exceed 250 Vrms.
8. Cable entry M20 x 1.5 or metal conduit

IECEx Certificate of Conformity

INTERNATIONAL ELECTROTECHNICAL COMMISSION
IEC Certification Scheme for Explosive Atmospheres
for rules and details of the IECEx Scheme visit www.iecex.com

Certificate No.: IECEx PTB 19.0010 | Issue No: 0 | Certificate history: Issue No. 0 (2019-03-04)

Status: **Current**

Date of Issue: **2019-03-04**

Applicant: **SAMSON AG Mess- und Regeltechnik**
Weismüllerstr. 3
60314 Frankfurt am Main
Germany

Equipment: **Positioner TROVIS 3730-1...**
Optional accessory:

Type of Protection: **"ia", "nA", "tb"**

Marking:

Ex ia IIC T4/T6 Gb and **Ex ia IIIC T85 °C Db** or
Ex tb IIIC T85 °C Db or
Ex nA IIC T4/T6 Gc and **Ex tb IIIC T85 °C Db** or
Ex nA IIC T4/T6 Gc

Approved for issue on behalf of the IECEx Certification Body: Dr.-Ing. Frank Lienesch

Position: Head of Department "Explosion Protection in Sensor Technology and Instrumentation"

Signature:
(for printed version)

Date: 11.3.19

1. This certificate and schedule may only be reproduced in full.
2. This certificate is not transferable and remains the property of the issuing body.
3. The Status and authenticity of this certificate may be verified by visiting the Official IECEx Website.

Certificate issued by:

Physikalisch-Technische Bundesanstalt (PTB)
Bundesallee 100
38116 Braunschweig
Germany

PTB
Physikalisch-Technische Bundesanstalt
Braunschweig und Berlin

IECEx Certificate of Conformity

Certificate No: IECEx PTB 19.0010 Issue No: 0

Date of Issue: **2019-03-04** Page 2 of 4

Manufacturer: **SAMSON AG Mess- und Regeltechnik**
Weismüllerstr. 3
60314 Frankfurt am Main
Germany

Additional Manufacturing location(s):

This certificate is issued as verification that a sample(s), representative of production, was assessed and tested and found to comply with the IEC Standard list below and that the manufacturer's quality system, relating to the Ex products covered by this certificate, was assessed and found to comply with the IECEx Quality system requirements. This certificate is granted subject to the conditions as set out in IECEx Scheme Rules, IECEx 02 and Operational Documents as amended.

STANDARDS:

The apparatus and any acceptable variations to it specified in the schedule of this certificate and the identified documents, was found to comply with the following standards:

IEC 60079-0 : 2011 Edition:6.0	Explosive atmospheres - Part 0: General requirements
IEC 60079-11 : 2011 Edition:6.0	Explosive atmospheres - Part 11: Equipment protection by intrinsic safety "i"
IEC 60079-15 : 2010 Edition:4	Explosive atmospheres - Part 15: Equipment protection by type of protection "n"
IEC 60079-31 : 2013 Edition:2	Explosive atmospheres - Part 31: Equipment dust ignition protection by enclosure "t"

*This Certificate **does not** indicate compliance with electrical safety and performance requirements other than those expressly included in the Standards listed above.*

TEST & ASSESSMENT REPORTS:

A sample(s) of the equipment listed has successfully met the examination and test requirements as recorded in

Test Report:

DE/PTB/ExTR19.0006/00

Quality Assessment Report:

DE/TUN/QAR06.0011/08

IECEx Certificate of Conformity

Certificate No: IECEx PTB 19.0010 Issue No: 0

Date of Issue: 2019-03-04 Page 3 of 4

Schedule

EQUIPMENT:

Equipment and systems covered by this certificate are as follows:

The positioner of type TROVIS 3730-1-... is a single-acting positioner intended for the installation on pneumatic control valves. For further information reference is made to the annex.

SPECIFIC CONDITIONS OF USE: NO

IECEx Certificate of Conformity

Certificate No: IECEx PTB 19.0010 Issue No: 0

Date of Issue: 2019-03-04 Page 4 of 4

Additional information:

Annex:

Annex IECEx PTB 19.0010-00.pdf

Applicant:

SAMSON AG Mess- und Regeltechnik

Weismüllerstraße 3, 60019 Frankfurt, Germany

Electrical Apparatus:

Positioner TROVIS 3730-1...

The thermal and electrical data are represented as follows:

For general relationship between temperature class and the permissible ambient temperature ranges, reference is made to the following tables:

Applies to type of protection: „ia"

Gas group	Tempera-tureclass	Permissible ambient temperature range	Permissible ambient temperature range *)
IIC	T6	-40 °C ... 55 °C	-40 °C ... 45 °C
	T4	-40 °C ... 80 °C	-40 °C ... 70 °C

*) For the optional operation with inductive limit contact, type 3

Applies to type of protection: „nA"

Gas group	Tempera-tureclass	Permissible ambient temperature range
IIC	T6	-40 °C ... 55 °C
	T4	-40 °C ... 80 °C

Applies to type of protection „ia"

Dust group	Max. surface temperature	Permissible ambient temperature range
IIIC	T 85 °C	-40 °C ... 55 °C

Physikalisch-Technische Bundesanstalt (PTB)
Bundesallee 100, 38116 Braunschweig, Germany
Postfach 33 45, 38023 Braunschweig, Germany
Telephone +49 531 592-0, Telefax +49 531 592-3605

Applies to type of protection „tb“

Dust group	Max. surface temperature	Permissible ambient temperature range
IIIC	T 85 °C	-40 °C ... 70 °C

Electrical data for type of protection „ia“:

Signal circuit
(terminals +11, -12)

type of protection Intrinsic Safety Ex ia IIC / IIIC only for connection to a certified intrinsically safe circuit

Maximum values:

U_i = 28 V
I_i = 115 mA
P_i = 1 W
C_i = 5 nF
L_i = negligible

Software-limit contacts
(terminals +45, -46, +55, -56)

type of protection Intrinsic Safety Ex ia IIC / IIIC only for connection to a certified intrinsically safe circuit

Maximum values:

U_i = 16 V
I_i = 52 mA
P_i = 169 mW
C_i = 15.9 nF
L_i = negligible

Limit contact, inductive
(terminals +41, -42, +51, -52)

type of protection Intrinsic Safety Ex ia IIC / IIIC only for connection to a certified intrinsically safe circuit

Maximum values:

Type 2			Type 3		
U_i =	16	V	U_i =	16	V
I_i =	25	mA	I_i =	52	mA
P_i =	64	mW	P_i =	169	mW
C_i =	35	nF	C_i =	35	nF
L_i =	100	µH	L_i =	100	µH

Physikalisch-Technische Bundesanstalt (PTB)
Bundesallee 100, 38116 Braunschweig, Germany
Postfach 33 45, 38023 Braunschweig, Germany
Telephone +49 531 592-0, Telefax +49 531 592-3605

Repeater (terminals +31, -32)	type of protection Intrinsic Safety Ex ia IIC / IIIC only for connection to a certified intrinsically safe circuit Maximum values: U_i = 28 V I_i = 115 mA P_i = 1 W C_i = 5 nF L_i = negligible

Electrical data for type of protection „nA“ and „tb“:

Signal circuit (terminals +11, -12)	I_N = 4 ... 20 mA; U_N = 6.5 V; P_N = 140 mW
Software-limit contacts (terminals +45, -46, +55, -56)	U_N = 8.2 V; R_i = 1 kΩ; P_N = 17 mW
Limit contact, inductive (terminals +41, -42, +51, -52)	U_N = 8.2 V; R_i = 1 kΩ; P_N = 17 mW
Repeater (terminals +31, -32)	U_N = 24 V; P_N = 518 mW

Physikalisch-Technische Bundesanstalt (PTB)
Bundesallee 100, 38116 Braunschweig, Germany
Postfach 33 45, 38023 Braunschweig, Germany
Telephone +49 531 592-0, Telefax +49 531 592-3605

ЕВРАЗИЙСКИЙ ЭКОНОМИЧЕСКИЙ СОЮЗ
ДЕКЛАРАЦИЯ О СООТВЕТСТВИИ

Заявитель: БИН 130640006195, Товарищество с ограниченной ответственностью "НИЦ ГеоСервис", юридический адрес: Республика Казахстан, Карагандинская область, город Караганда, район имени Казыбек Би, улица Терешковой, 18, индекс: M02E3T6, телефон: +7 (777) 540 50 96, электронная почта: cert_msk2@geomark.kz

в лице: Директора, Григорьевой Татьяны Михайловны, действующего на основании Устава

Заявляет, что: Электропневматические позиционеры, типов: 3725, 3731, 3766, 3767, 3730-4, 3730-5, TROVIS 3730-1, TROVIS 3730-3, TROVIS 3793, TROVIS SAFE 3793; Продукция изготавливается в соответствии с Directive 2014/30/ EU Electromagnetic Compatibility (EMC); серийный выпуск

Изготовитель: «SAMSON AKTIENGESELLSCHAFT», юридический адрес: Германия, Weismüllerstraße 3, 60314 Frankfurt am Main, адрес места осуществления деятельности: Германия, Weismüllerstraße 3, 60314 Frankfurt am Main; Германия, Kettelerstraße 99, 63075 Offenbach am Main

Код ТН ВЭД ЕАЭС: 9032810000

соответствует требованиям: ТР ТС 020/2011 "Электромагнитная совместимость технических средств" принятого Решением Комиссии Таможенного Союза от 09.12.2011г. № 879

Декларация о соответствии принята на основании: протоколов испытаний от 01.11.2010г., от 16.07.2008г., 18.04.2008г., 07.02.2013г., 28.03.1996г., 22.01.2024г., 31.08.2022г., 23.06.2020г. выданных заводской испытательной лабораторией «SAMSON AKTIENGESELLSCHAFT»; технической документации; акта контроля стабильности производства, выданного «SAMSON AKTIENGESELLSCHAFT»; схема декларирования: 1д

Дополнительная информация: ГОСТ IEC 61000-6-3-2016 «Электромагнитная совместимость (ЭМС). Часть 6-3. Общие стандарты. Стандарт электромагнитной эмиссии для жилых, коммерческих и легких промышленных обстановок»; ГОСТ 30804.6.1-2013 (IEC 61000-6-1:2005) «Совместимость технических средств электромагнитная. Устойчивость к электромагнитным помехам технических средств, применяемых в жилых, коммерческих зонах и производственных зонах с малым энергопотреблением. Требования и методы испытаний»; ГОСТ 30969-2002 «Совместимость технических средств электромагнитная. Электрическое оборудование для измерения, управления и лабораторного применения. Требования и методы испытаний»; Срок службы 15 лет. Действие декларации распространяется на продукцию, изготовленную с 10.2025 г.; Условия и срок хранения указаны в эксплуатационной документации; Договор № 01-02/10 от 07.08.2025г.

Декларация о соответствии действительна с даты регистрации по **15.02.2031 г.** включительно

(подпись) М.П. «НИЦ ГеоСервис»

ГРИГОРЬЕВА ТАТЬЯНА МИХАЙЛОВНА
(Ф. И. О. заявителя)

Регистрационный номер декларации о соответствии: ЕАЭС № ЕАЭС KZ.7500525.13.12.10578

Дата регистрации декларации о соответствии: 16.02.2026

ЕУРАЗИЯЛЫҚ ЭКОНОМИКАЛЫҚ ОДАҒЫ СӘЙКЕСТІК ТУРАЛЫ ДЕКЛАРАЦИЯ

Өтініш беруші: БСН 1306400061 95, "НИЦ ГеоСервис" жауапкершілігі шектеулі серіктестігі, заңды мекенжайы: Қазақстан Республикасы, Қарағанды облысы, Қарағанды қаласы, Қазыбек Би атындағы аудан, Терешкова көшесі, 18, индекс: M02E3T6, телефон: +7 (777) 540 50 96, электрондық пошта: cert_msk2@geomark.kz

Тұлғасында: Директор, Григорьевой Татьяны Михайловны, негізінде әрекет етеді Жарғы

Мынаны мәлімдейді: Электрпневматикалық позиционерлер, типтері: 3725, 3731, 3766, 3767, 3730-4, 3730-5, TROVIS 3730-1, TROVIS 3730-3, TROVIS 3793, TROVIS SAFE 3793; Өнім Directive 2014/30/EU Electromagnetic Compatibility (EMC) сәйкес дайындалады; сериялық шығарылым

Өндіруші:«SAMSON AKTIENGESELLSCHAFT», орналасқан жері: Германия, Weismüllerstraße 3, 60314 Frankfurt am Main, қызмет жүзеге асырылатын мекенжай: Германия, Weismüllerstraße 3, 60314 Frankfurt am Main; Германия, Kettelerstraße 99, 63075 Offenbach am Main

ЕАЭО СЭҚ ТН коды: 9032810000

Талаптарға сәйкестігі: Кеден одағының техникалық регламенті КО ТР 020/2011 "Техникалық құралдардың электромагниттік үйлесімділігі" Кеден одағы комиссиясының 2011 жылғы 9 желтоқсандағы № 879 шешімімен бекітілген

Сәйкестік туралы декларация негізінде қабылданды: 2010ж.11.01, 2008ж.07.16, 2008ж.04.18, 2013ж.02.07, 1996ж.03.28, 2024ж.01.22, 2022ж.08.31, 2020ж.06.23 «SAMSON AKTIENGESELLSCHAFT» зауыттық сынақ зертханасы берілген сынақ хаттамаларын; техникалық құжаттама; «SAMSON AKTIENGESELLSCHAFT» берген өндіріс тұрақтылығын бақылау актісі; декларация схемасы: 1д

Қосымша ақпарат: МСТ IEC 61000-6-3-2016 "Электромагниттік үйлесімділік (ЭМС). 6-3 бөлім. Жалпы стандарттар. Тұрғын үй, коммерциялық және жеңіл өнеркәсіптік жағдайларға арналған электромагниттік эмиссия стандарты"; МСТ 30804.6.1-2013 (IEC 61000-6-1:2005) "Техникалық құралдардың электромагниттік үйлесімділігі. Тұрғын үй, коммерциялық аймақтарда және аз энергия тұтынатын өндірістік аймақтарда қолданылатын техникалық құралдардың электромагниттік кедергілерге төзімділігі. Сынақ талаптары мен әдістері"; МСТ 30969-2002 (МЭК 61326-1:1997) "Техникалық құралдардың электромагниттік үйлесімділігі. Өлшеуге, басқаруға және зертханалық қолдануға арналған электр жабдығы. Сынақ талаптары мен әдістері"; Қызмет ету мерзімі - 15 жыл. Декларацияның күші 2025ж.10 бастап дайындалған өнімге қолданылады; Сақтау шарттары мен мерзімі пайдалану құжаттамасында көрсетілген; 2025ж.08.07 № 01-02/10 Шарт.

Сәйкестік туралы декларация тіркелген күнінен бастап **15.02.2031 г.** қоса алғанға дейін жарамды.

«НИЦ ГеоСервис»

(қолтаңба) **ГРИГОРЬЕВА ТАТЬЯНА МИХАЙЛОВНА**

(Өтініш берушінің Т.А.Ә.)

Сәйкестік туралы декларацияның тіркеу нөмірі: ЕАЭС № ЕАЭС KZ.7500525.13.12.10578

Сәйкестік туралы декларацияның тіркеу күні: 16.02.2026

ЕВРАЗИЙСКИЙ ЭКОНОМИЧЕСКИЙ СОЮЗ

СЕРТИФИКАТ СООТВЕТСТВИЯ

EAC

№ ЕАЭС KZ.7500525.01.01.02374

Серия KZ № 0305496

ОРГАН ПО СЕРТИФИКАЦИИ

БИН 990940001103, ТОО "Т-СТАНДАРТ", аттестат аккредитации: KZ.O.02.0525, юридический адрес: Республика Казахстан, город Алматы, Бостандыкский район, проспект Аль-Фараби 19/1, ПФЦ «Нурлы-Тау», блок 3Б, 2 этаж, почтовый индекс: 050059, фактический адрес: Республика Казахстан, город Алматы, Бостандыкский район, проспект Аль-Фараби 19/1, ПФЦ «Нурлы-Тау», блок 3Б, 2 этаж, почтовый индекс: 050059, телефон: +7(701) 071 63 88, электронная почта: office@tst.kz

ЗАЯВИТЕЛЬ

130640006195, Товарищество с ограниченной ответственностью "НИЦ ГеоСервис". Место нахождения (адрес юридического лица) и адрес места осуществления деятельности: Республика Казахстан, Карагандинская область, город Караганда, район имени Казыбек Би, улица Терешковой, 18, индекс: M02E3T6. телефон: +7 (777) 540 50 96, электронная почта: cert_msk2@geomark.kz

ИЗГОТОВИТЕЛЬ

«SAMSON AKTIENGESELLSCHAFT», располагающийся по адресу: Германия, Weismüllerstraße 3, 60314 Frankfurt am Main; адрес осуществления деятельности: Германия, Weismüllerstraße 3, 60314 Frankfurt am Main; Kettelerstraße 99, 63075 Offenbach am Main

ПРОДУКЦИЯ

Электрическое оборудование: Электропневматические позиционеры, типов: 3725, 3731, 3766, 3767, 3730-4, 3730-5, TROVIS 3730-1, TROVIS 3730-3, TROVIS 3793, TROVIS SAFE 3793 во взрывозащищенном исполнении, маркировка взрывозащиты и описание согласно приложению № 0159510-0159523; Продукция изготавливается в соответствии с Directive 2014/34/EU Equipment and protective systems intended for use in potentially explosive atmospheres; серийный выпуск

КОД ТНВЭД ЕАЭС

9032810000

СООТВЕТСТВУЕТ ТРЕБОВАНИЯМ

ТР ТС 012/2011 "О безопасности оборудования для работы во взрывоопасных средах" утвержденного решением Комиссии Таможенного союза от 18 октября 2011 г. № 825;

СЕРТИФИКАТ ВЫДАН НА ОСНОВАНИИ

протоколов испытаний № ИЛ-12/08-3, № ИЛ-12/08-4 от 08.12.2025г., № ИЛ-12/10-3 - № ИЛ-12/10-5 10.12.2025г. выданных аккредитованной Испытательной лабораторией филиала "Атырау" Товарищества с ограниченной ответственностью "Т-Стандарт" (аттестат: KZ.T.06.2232); акта анализа состояния производства от 27.10.2025г. (эксперт-аудитор Жигалина Г.М.), выданного Органом по подтверждению соответствия Товарищества с ограниченной ответственностью "Т-Стандарт" (аттестат: KZ.O.02.0525); пояснительной записки; технической документации; Схема сертификации 1с;

ДОПОЛНИТЕЛЬНАЯ ИНФОРМАЦИЯ

выдан взамен сертификата № ЕАЭС KZ 7500525.01.01.02367 от 08.01.2026. Периодическую оценку сертифицируемой продукции проводит Орган по подтверждению соответствия Товарищества с ограниченной ответственностью "Т-Стандарт"; Действие сертификата распространяется на продукцию, изготовленную с 10.2025 г.; Условия хранения указаны в эксплуатационной документации. Срок службы – 15 лет; Договор № 01-02/10 от 07.08.2025г. ГОСТ 31610.0-2019 "Взрывоопасные среды. Часть 0. Оборудование. Общие требования"; ГОСТ 31610.11-2014 "Взрывоопасные среды. Часть 11. Оборудование с видом взрывозащиты «искробезопасная электрическая цепь "i"; ГОСТ IEC 60079-31-2013 "Взрывоопасные среды. Часть 31. Оборудование с защитой от воспламенения пыли оболочками "t"; ГОСТ IEC 60079-1-2013 "Взрывоопасные среды. Часть 1. Оборудование с видом взрывозащиты "взрывонепроницаемые оболочки "d"; ГОСТ 31610.7-2017 "Взрывоопасные среды. Часть 7. Оборудование. Повышенная защита вида "e"

СРОК ДЕЙСТВИЯ С 20.01.2026 ПО 19.01.2031 ВКЛЮЧИТЕЛЬНО

М.П.

Руководитель (уполномоченное лицо) органа по сертификации — (подпись) — Овчинникова Вера Александровна (Ф.И.О.)

Эксперт (эксперт-аудитор) (эксперты-аудиторы) — (подпись) — Каталымова Евгения Владимировна (Ф.И.О.)

ЕУРАЗИЯЛЫҚ ЭКОНОМИКАЛЫҚ ОДАҚ

СӘЙКЕСТІК СЕРТИФИКАТЫ

EAC

№ ЕАЭС KZ.7500525.01.01.02374

Серия KZ № 0305496

СЕРТИФИКАТТАУ ЖӨНІНДЕГІ ОРГАН

БСН 990940001103, "Т-СТАНДАРТ" ЖШС, аттестат: KZ.O.02.0525, заңды мекенжайы: Қазақстан Республикасы, Алматы қаласы, Бостандық ауданы, Аль-Фараби даңғылы 19/1, ПФО «Нурлы-Тау», блок 3Б, 2 қабат, пошта индексі: 050059, нақты мекенжайы: Қазақстан Республикасы, Алматы қаласы, Бостандық ауданы, Аль-Фараби даңғылы 19/1, ПФО «Нурлы-Тау», блок 3Б, 2 қабат, пошта индексі: 050059, телефон: +7(701) 071 63 88, электрондық пошта: office@tst.kz

ӨТІНІШ БЕРУШІ

БСН 130640006195, "НИЦ ГеоСервис" жауапкершілігі шектеулі серіктестігі. Орналасқан жері (заңды тұлғаның мекенжайы) және қызметті жүзеге асыру орнының мекенжайы: Қазақстан Республикасы, Қарағанды облысы, Қарағанды қаласы, Қазыбек Би атындағы аудан, Терешкова көшесі, 18, индексі: M02E3T6. телефон: +7 (777) 540 50 96, электрондық пошта: cert_msk2@geomark.kz

ӨНДІРУШІ

«SAMSON AKTIENGESELLSCHAFT», мекен-жайы бойынша орналасқан: Германия, Weismüllerstraße 3, 60314 Frankfurt am Main қызметті жүзеге асыру орнының мекенжайы: Германия, Weismüllerstraße 3, 60314 Frankfurt am Main, Германия, Kettelerstraße 99, 63075 Offenbach am Main

ӨНІМДЕР

Электр жабдығы: Электрпневматикалық позициялар типті: 3725, 3731, 3766, 3767, 3730-4, 3730-5, TROVIS 3730-1, TROVIS 3730-3, TROVIS 3793, TROVIS SAFE 3793 жарылыстан қорғалған орындауда, № 0159510-0159523 қосымшаға сәйкес жарылыстан қорғауды таңбалау және сипаттау; Өнім Directive 2014/34/EU Equipment and protective systems intended for use in potentially explosive atmospheres сәйкес дайындалған; сериялық шығарылым

ЕАЭО СЭҚ ТН коды

9032810000

ТАЛАПТАРҒА СӘЙКЕС КЕЛЕДІ

Кеден одағының техникалық регламенті Кеден одағының техникалық регламенті КО ТР 012/2011 "Жарылыс қаупі бар ортада жұмыс жасауға арналған жабдықтың қауіпсіздігі туралы" Кедендік одағы комиссиясының 2011 жылғы 18 қазандағы № 825 шешімімен бекітілген

СЕРТИФИКАТ НЕГІЗІНДЕ БЕРІЛДІ

2025ж.12.08 № ИЛ-12/08-3, № ИЛ-12/08-4, 2025ж.12.10 № ИЛ-12/10-3 - № ИЛ-12/10-5 «Т-Стандарт» жауапкершілігі шектеулі серіктестігінің «Атырау» филиалының аккредиттелген сынақ зертханасы берген сынау хаттамалары (аттестат: KZ.T.06.2232); 2025ж.10.27 «Т-Стандарт» жауапкершілігі шектеулі серіктестігінің сәйкестікті растау жөніндегі органы берген (сарапшы-аудитор Жигалина Г.М.) өндірістің жай-күйін талдау актісі (аттестат: KZ.O.02.0525); түсіндірме жазбаны, пайдалану құжаттамасы; Сертификаттау схемасы: 1с

ҚОСЫМША АҚПАРАТ

2026.01.08 № ЕАЭС KZ 7500525.01.01.02367 сертификатының орнына берілді. Сертификатталатын өнімді мерзімді бағалауды "Т-Стандарт" жауапкершілігі шектеулі серіктестігінің сәйкестігін растау жөніндегі Орган жүргізеді; сертификаттың күші 2025ж.10 бастап дайындалған өнімге қолданылады; Сақтау шарттары пайдалану құжаттамасында көрсетілген. Қызмет ету мерзімі – 15 жыл; 2025ж.08.07 № 01-02/10 Шарт; МСТ 31610.0-2019 (IEC 60079-0:2017) "Жарылыс қаупі бар орта. 0-бөлім. Жабдық. Жалпы талаптар"; МСТ 31610.11-2014 (IEC 60079-11:2011) "Жарылыс қаупі бар орталар 11 бөлім. «Ұшқынған қауіпсіз электр тізбегі «i» жарылыстан қорғау түрі бар жабдық"; МСТ IEC 60079-31-2013 "Жарылыс қаупі бар орта. 31-бөлім. «t» қабықшаларымен шаңның тұтануынан қорғайтын жабдық"; МСТ IEC 60079-1-2013 "Жарылыс қаупі бар орталар. 1-бөлім. Жарылыстан қорғау «d" жарылыс өткізбейтін қабықшалар" түріндегі жабдық"; МСТ 31610.7-2017 (IEC 60079-7:2015) "Жарылыс қаупі бар орта. 7-бөлім. Жабдық. "e" түрін жоғары қорғау"

ЖАРАМДЫЛЫҚ МЕРЗІМІ 20.01.2026 БАСТАП 19.01.2031 ДЕЙІН ҚОСА АЛҒАНДА

Басшы (уәкілетті тұлға) сертификаттау жөніндегі орган — (қолы) — Овчинникова Вера Александровна (Т.А.Ж.)

М.П.

Сарапшы (сарапшы-аудитор) (сарапшы / сарапшы-аудиторлар) — (қолы) — Каталымова Евгения Владимировна (Т.А.Ж.)

ЕВРАЗИЙСКИЙ ЭКОНОМИЧЕСКИЙ СОЮЗ

ПРИЛОЖЕНИЕ

Серия KZ № 0159510

EAC

К СЕРТИФИКАТУ СООТВЕТСТВИЯ № ЕАЭС KZ.7500525.01.01.02374

от 20.01.2026

Действителен до 19.01.2031

1 лист

1. НАЗНАЧЕНИЕ И ОБЛАСТЬ ПРИМЕНЕНИЯ

Электропневматические позиционеры, типов: 3725, 3731, 3766, 3767, 3730-4, 3730-5, TROVIS 3730-1, TROVIS 3730-3, TROVIS 3793, TROVIS SAFE 3793 во взрывозащищенном исполнении – далее позиционеры, предназначены для преобразования электрического входного сигнала в пропорциональный пневматический выходной сигнал и выдачи токового или цифрового сигнала контроля положения клапана.

Область применения – взрывоопасные зоны класса 1 и 2 по ГОСТ 31610.10-1-2022 (IEC 60079-10-1:2020) «Взрывоопасные среды. Часть 10-1. Классификация зон. Взрывоопасные газовые среды», зоны класса 21 и 22 по ГОСТ 31610.10-2-2017 (IEC 60079-10-2:2015) «Взрывоопасные среды. Часть 10-2. Классификация зон. Взрывоопасные пылевые среды».

2. МАРКИРОВКА ВЗРЫВОЗАЩИТЫ

Маркировка взрывозащиты и защиты от воспламенения горючей пыли в зависимости от типов и моделей приведена в таблице 1.

Таблица 1.

Наименование взрывозащищенного электрооборудования	Маркировка взрывозащиты	Маркировка защиты от воспламенения горючей пыли
Электропневматические позиционеры, типа 3725; модель 3725-113	1Ex ia IIC T4 Gb X	-
Электропневматические позиционеры, типа 3731; модели 3731-321 и 3731-521	1Ex db IIC T6 Gb X 1Ex db eb IIC T6 Gb X	Ex tb IIIC T80 °C Db X
Электропневматические позиционеры, типов 3766 и 3767; модели 3766-1 и 3767-1	1Ex ia IIC T6 Gb	-
Электропневматические позиционеры, типов 3730-4 и 3730-5; модели 3730-41 и 3730-51	1Ex ia IIC T6…T4 Gb	Ex ia IIIC T80 °C Db
Электропневматические позиционеры, типов 3730-4 и 3730-5; модели 3730-45 и 3730-55	-	Ex tb IIIC T80 °C Db
Электропневматические позиционеры, типов TROVIS 3730-1 и TROVIS 3730-3; модели TROVIS 3730-1-113 и TROVIS 3730-3-113	1Ex ia IIC T4/T6 Gb X	Ex ia IIIC T85 °C Db X
Электропневматические позиционеры, типов TROVIS 3730-1 и TROVIS 3730-3; модели TROVIS 3730-1-513 и TROVIS 3730-3-513	-	Ex tb IIIC T85 °C Db X
Электропневматические позиционеры, типа TROVIS 3730-3; модель TROVIS 3730-3-813	2Ex ec IIC T4/T6 Gc X	Ex tb IIIC T85 °C Db X
Электропневматические позиционеры, типов TROVIS 3793 и TROVIS SAFE 3793; модели TROVIS 3793-113 и TROVIS 3793-1135	1Ex ia IIC T4/T6 Gb X	Ex ia IIIC T85 °C Db X
Электропневматические позиционеры, типов TROVIS 3793 и TROVIS SAFE 3793; модели TROVIS 3793-513 и TROVIS 3793-5135	-	Ex tb IIIC T85 °C Db X
Подробное разъяснение к спецификационным кодам моделей электропневматических позиционеров приводятся в технической документации изготовителя.		

Руководитель (уполномоченное лицо) органа по сертификации — (подпись) — Овчинникова Вера Александровна (Ф.И.О.)

М.П.

Эксперт (эксперт-аудитор) (эксперт/эксперты-аудиторы) — (подпись) — Каталымова Евгения Владимировна (Ф.И.О.)

ЕУРАЗИЯЛЫҚ ЭКОНОМИКАЛЫҚ ОДАҚ

СӘЙКЕСТІК СЕРТИФИКАТЫНА Серия KZ № 0159510

EAC

ҚОСЫМША № ЕАЭС KZ.7500525.01.01.02374

20.01.2026
дейін жарамды 19.01.2031
1 парақ

1. МАҚСАТЫ ЖӘНЕ ҚОЛДАНУ САЛАСЫ

Электрпневматикалық позициялар типті: 3725, 3731, 3766, 3767, 3730-4, 3730-5, TROVIS 3730-1, TROVIS 3730-3, TROVIS 3793, TROVIS SAFE 3793 жарылыстан қорғалған орындауда – бұдан әрі позициялаушылар электр кіру сигналын теңе-тең пневматикалық шығу сигналына айналдыруға және клапанның жағдайын бақылаудың тоқтық немесе цифрлық сигналын беруге арналған..

Қолдану саласы - МСТ 31610.10-1-2022 (IEC 60079-10-1:2020) «Жарылыс қаупі бар орталар. 10-1 бөлім. Аймақтардың жіктелуі. Жарылыс қаупі бар газ ортасы» бойынша 1 және 2 сыныпты жарылыс қаупі бар аймақтар, МСТ 31610.10-2-2017 (IEC 60079-10-2:2015) «Жарылыс қаупі бар орталар. 10-2 бөлім. Аймақтардың жіктелуі. Жарылыс қаупі бар шаң ортасы» бойынша 21 және 22 класты аймақтар.

2. ЖАРЫЛЫСТАН ҚОРҒАУДЫ ТАҢБАЛАУ

Типтері мен үлгілеріне байланысты жарылыстан қорғау және жанғыш шаңның тұтануынан қорғау таңбалануы 1-кестеде келтірілген.

Кесте 1.

Жарылыстан қорғалған электр жабдығының атауы	Жарылыстан қорғауды таңбалау	Жанғыш шаңның тұтануынан қорғауды таңбалау
3725 типті электрпневматикалық позиционерлер; 3725-113 үлгісі	1Ex ia IIC T4 Gb X	-
3731 типті электрпневматикалық позиционерлер; 3731-321 және 3731-521 модельдері	1Ex db IIC T6 Gb X 1Ex db eb IIC T6 Gb X	Ex tb IIIC T80 °C Db X
3766 және 3767 типті электрпневматикалық позиционерлер; 3766-1 және 3767-1 модельдері	1Ex ia IIC T6 Gb	-
3730-4 және 3730-5 типті электрпневматикалық позиционерлер; 3730-41 және 3730-51 модельдері	1Ex ia IIC T6…T4 Gb	Ex ia IIIC T80 °C Db
3730-4 және 3730-5 типті электрпневматикалық позиционерлер; 3730-45 және 3730-55 модельдері	-	Ex tb IIIC T80 °C Db
TROVIS 3730-1 және TROVIS 3730-3 типті электрпневматикалық позиционерлер; TROVIS 3730-1-113 және TROVIS 3730-3-113 модельдері	1Ex ia IIC T4/T6 Gb X	Ex ia IIIC T85 °C Db X
TROVIS 3730-1 және TROVIS 3730-3 типті электрпневматикалық позиционерлер; TROVIS 3730-1-513 және TROVIS 3730-3-513 модельдері	-	Ex tb IIIC T85 °C Db X
TROVIS 3730-3 типті электрпневматикалық позиционерлер; TROVIS үлгісі 3730-3-813	2Ex ec IIC T4/T6 Gc X	Ex tb IIIC T85 °C Db X
TROVIS 3793 және TROVIS SAFE 3793 типті электрпневматикалық позиционерлер; TROVIS 3793-113 және TROVIS 3793-1135 модельдері	1Ex ia IIC T4/T6 Gb X	Ex ia IIIC T85 °C Db X
TROVIS 3793 және TROVIS SAFE 3793 типті электрпневматикалық позиционерлер; TROVIS 3793-513 және TROVIS 3793-5135 модельдері	-	Ex tb IIIC T85 °C Db X
Электрпневматикалық позиционерлер үлгілерінің спецификациялық кодтарына егжей-тегжейлі түсініктеме дайындаушының техникалық құжаттамасында келтіріледі.		

Руководитель (уполномоченное лицо) органа по сертификации — (подпись) — Овчинникова Вера Александровна (Ф.И.О.)

М.П.

Эксперт (эксперт-аудитор) (эксперты-аудиторы) — (подпись) — Катадымова Евгения Владимировна (Ф.И.О.)

ЕВРАЗИЙСКИЙ ЭКОНОМИЧЕСКИЙ СОЮЗ

ПРИЛОЖЕНИЕ

Серия KZ № 0159516

EAC

К СЕРТИФИКАТУ СООТВЕТСТВИЯ № ЕАЭС KZ.7500525.01.01.02374

от 20.01.2026

Действителен до 19.01.2031

7 лист

3.7.6. Позиционеры TROVIS 3730-1-113 с индуктивными предельными контактами, контакты +41/-42 и +51/-52

3.7.6.1. Параметры искробезопасных цепей, контакты +41/-42 и +51/-52

Цепь	Индуктивный датчик тип 2	Индуктивный датчик тип 3
U_i, В	≤ 16	≤ 16
I_i, мА	≤ 25	≤ 52
P_i, мВт	≤ 64	≤ 169
C_i, нФ	≤ 35	≤ 35
L_i, мкГн	≤ 100	≤ 100

3.7.7. Позиционеры TROVIS 3730-1-113 с датчиками фактического положения, контакты +31/-32

3.7.7.1. Параметры искробезопасных цепей, контакты +31/-32

U_i, В ..... ≤ 28

I_i, мА ..... ≤ 115

P_i, Вт ..... ≤ 1

C_i, нФ ..... ≤ 5

L_i, мкГн ..... пренебрежимо мала

3.8. Электропневматические позиционеры модели TROVIS 3730-1-513

3.8.1. Степень защиты оболочки по ГОСТ 14254-2015, не ниже IP66

3.8.2. Допустимый диапазон температуры окружающей среды для взрывоопасных пылевых зон T85 °C ..... от минус 55 °C до +70 °C

3.8.3. Электрические характеристики

3.8.3.1. Сигнальная цепь, контакты +11/-12

U_N, В 6,5

I_N, мА ..... от 4 до 20

P_N, мВт 140

3.8.3.2. Позиционеры TROVIS 3730-1-113 с программными предельными контактами, контакты +45/-46 и +55/-56

U_N, В 8,2

R_i, кΩ 1

P_N, мВт 17

3.8.3.3. Позиционеры TROVIS 3730-1-113 с индуктивными предельными контактами, контакты +41/-42 и +51/-52

U_N, В 8,2

R_i, кΩ 1

P_N, мВт 17

3.8.3.4. Позиционеры TROVIS 3730-1-113 с датчиками фактического положения, контакты +31/-32

U_N, В 24

P_N, мВт 518

3.9. Электропневматические позиционеры модели TROVIS 3730-3-113

3.9.1. Степень защиты оболочки по ГОСТ 14254-2015, не ниже IP66

3.9.2. Допустимый диапазон температуры окружающей среды для температурного класса

T6 ..... от минус 55 °C до +55 °C

T4 ..... от минус 55 °C до +80 °C

с индуктивными предельными контактами типа 3:

T6 ..... от минус 50 °C до +45 °C

T4 ..... от минус 50 °C до +70 °C

с внешним датчиком положения:

T6 ..... от минус 30 °C до +55 °C

T4 ..... от минус 30 °C до +80 °C

Руководитель (уполномоченное лицо) органа по сертификации — (подпись) — Овчинникова Вера Александровна (Ф.И.О.)

М.П.

Эксперт (эксперт-аудитор) (эксперт/эксперты-аудиторы) — (подпись) — Каталымова Евгения Владимировна (Ф.И.О.)

ЕУРАЗИЯЛЫҚ ЭКОНОМИКАЛЫҚ ОДАҚ

СӘЙКЕСТІК СЕРТИФИКАТЫНА Серия KZ № 0159516

EAC

ҚОСЫМША № ЕАЭС KZ.7500525.01.01.02374

20.01.2026
дейін жарамды 19.01.2031
7 парақ

3.7.6. Индуктивті шекті байланыстары бар TROVIS 3730-1-113 позициялары, +41/-42 және +51/-52 байланыстары
3.7.6.1. Ұшқын қауіпсіз тізбектердің параметрлері, байланыстар +41/-42 және +51/-52

Тізбек	Индуктивті датчик түрі 2	Индуктивті датчик түрі 3
U_i, В	≤ 16	≤ 16
I_i, мА	≤ 25	≤ 52
P_i, мВт	≤ 64	≤ 169
C_i, нФ	≤ 35	≤ 35
L_i, мкГн	≤ 100	≤ 100

3.7.7. TROVIS 3730-1-113 нақты жағдай датчиктері бар позицияла ры, байланыс +31/-32
3.7.7.1. Ұшқын қауіпсіз тізбектердің параметрлері, байланыстар +31/-32
U_i, В ..... ≤ 28
I_i, мА ..... ≤ 115
P_i, Вт ..... ≤ 1
C_i, нФ ..... ≤ 5
L_i, мкГн ..... елемей-ақ кішкентай

3.8. TROVIS 3730-1-513 моделінің электрпневматикалық позициялары
3.8.1. МСТ 14254-2015 бойынша қабықты қорғау дәрежесі, төмен емес IP66
3.8.2. Жарылыс қаупі бар шаң аймақтары үшін қоршаған орта температурасының рұқсат етілген диапазоны
T85 °C ..... минус 55 °C бастап +70 °C дейін
3.8.3. Электр сипаттамалары
3.8.3.1. Сигнал тізбегі, байланыстар +11/-12
U_N, В 6,5
I_N, мА ..... 4-тен 20-ға дейін
P_N, мВт 140
3.8.3.2. Бағдарламалық шекті байланыстары бар TROVIS 3730-1-113 позициялары, +45/-46 және +55/-56 байланыстары
U_N, В 8,2
R_i, кΩ 1
P_N, мВт 17
3.8.3.3. Индуктивті шекті байланыстары бар TROVIS 3730-1-113 позициялары, +41/-42 және +51/-52 байланыстары
U_N, В 8,2
R_i, кΩ 1
P_N, мВт 17
3.8.3.4. TROVIS 3730-1-113 нақты жағдай датчиктері бар позицияла ры, байланыстар +31/-32
U_N, В 24
P_N, мВт 518

3.9. TROVIS 3730-3-113 моделінің электрпневматикалық позициялары
3.9.1. МСТ 14254-2015 бойынша қабықты қорғау дәрежесі, төмен емес IP66
3.9.2. Температура сыныбы үшін қоршаған орта температурасының рұқсат етілген диапазоны
T6 ..... минус 55 °C бастап +55 °C дейін
T4 ..... минус 55 °C бастап +80 °C дейін
3 типті индуктивті шекті контактілері бар:
T6 ..... минус 50 °C бастап +45 °C дейін
T4 ..... минус 50 °C бастап +70 °C дейін
орналасудың сыртқы датчигімен:
T6 ..... минус 30 °C бастап +55 °C дейін
T4 ..... минус 30 °C бастап +80 °C дейін

М.П.

Руководитель (уполномоченное лицо) органа по сертификации — (подпись) — Овчинникова Вера Александровна (Ф.И.О.)

Эксперт (эксперт-аудитор) (эксперт/эксперты-аудиторы) — (подпись) — Катальмова Евгения Владимировна (Ф.И.О.)

ЕВРАЗИЙСКИЙ ЭКОНОМИЧЕСКИЙ СОЮЗ

ПРИЛОЖЕНИЕ

Серия KZ № 0159517

EAC

К СЕРТИФИКАТУ СООТВЕТСТВИЯ № ЕАЭС KZ.7500525.01.01.02374

от 20.01.2026

Действителен до 19.01.2031

3.9.3. Допустимый диапазон температуры окружающей среды для взрывоопасных пылевых зон
T85 °C ..... от минус 55 °C до +55 °C
с внешним датчиком положения:
T85 °C ..... от минус 30 °C до +55 °C

3.9.4. Параметры искробезопасных цепей, контакты +11/-12
U_i, В ..... ≤ 28
I_i, мА ..... ≤ 115
P_i, Вт ..... ≤ 1
C_i, нФ ..... ≤ 14,6
L_i, мкГн ..... пренебрежимо мала

3.9.5. Позиционеры TROVIS 3730-3-113 с программными предельными контактами (NAMUR), контакты +45/-46 и +55/-56

3.9.5.1. Параметры искробезопасных цепей, контакты +45/-46 и +55/-56
U_i, В ..... ≤ 16
I_i, мА ..... ≤ 52
P_i, мВт ..... ≤ 169
C_i, нФ ..... ≤ 11,1
L_i, мкГн ..... пренебрежимо мала

3.9.6. Позиционеры TROVIS 3730-3-113 с бинарным выходом (NAMUR), контакты +83/-84

3.9.6.1. Параметры искробезопасных цепей, контакты +83/-84
U_i, В ..... ≤ 16
I_i, мА ..... ≤ 52
P_i, мВт ..... ≤ 169
C_i, нФ ..... ≤ 16
L_i, мкГн ..... пренебрежимо мала

3.9.7. Позиционеры TROVIS 3730-3-113 с бинарным входом (24 В, постоянного тока), контакты +87/-88

3.9.7.1. Параметры искробезопасных цепей, контакты +87/-88
U_i, В ..... ≤ 28
I_i, мА ..... ≤ 115
P_i, Вт ..... ≤ 1
C_i, нФ ..... ≤ 37,1
L_i, мкГн ..... пренебрежимо мала

3.9.8. Позиционеры TROVIS 3730-3-113 с датчиками фактического положения, контакты +31/-32

3.9.8.1. Параметры искробезопасных цепей, контакты +31/-32
U_i, В ..... ≤ 28
I_i, мА ..... ≤ 115
P_i, Вт ..... ≤ 1
C_i, нФ ..... ≤ 16
L_i, мкГн ..... пренебрежимо мала

3.9.9. Позиционеры TROVIS 3730-3-113 с клапаном принудительного сброса, контакты +81/-82

3.9.9.1. Параметры искробезопасных цепей, контакты +81/-82
U_i, В ..... ≤ 28
I_i, мА ..... ≤ 115
P_i, Вт ..... ≤ 1
C_i, нФ ..... ≤ 13,5
L_i, мкГн ..... пренебрежимо мала

Руководитель (уполномоченное лицо) органа по сертификации — (подпись) — Овчинникова Вера Александровна (Ф.И.О.)

М.П.

Эксперт (эксперт-аудитор) (эксперт/эксперты-аудиторы) — (подпись) — Кагалымова Евгения Владимировна (Ф.И.О.)

ЕУРАЗИЯЛЫҚ ЭКОНОМИКАЛЫҚ ОДАҚ

СӘЙКЕСТІК СЕРТИФИКАТЫНА Серия KZ № 0159523

EAC

ҚОСЫМША № ЕАЭС KZ.7500525.01.01.02374

20.01.2026

дейін жарамды 19.01.2031

14 парақ

- тұрақты қосылған кәбілмен электрпневматикалық позицияларды орындаған жағдайда сыртқы электр тізбектерін кәбілдің бос ұшына қосу МЕМСТ IEC 61241-14-2013 талаптарына сәйкес сертификатталған жалғау қорабының көмегімен не жарылыс қаупі бар аймақтан тыс жүзеге асырылуы тиіс;
- жұмыс ортасы ретінде жанғыш газдар, оттегі және оттегімен қанықкан газдар сияқты жарылыс қаупі бар атмосфераны түзуге қабілетті заттары бар газдарды пайдалануға жол берілмейді;
- кіре берістегі ең жоғары қысым 0,6 МПа (6 бар) аспауы тиіс 3731-321, 3731-521, 3766-1, 3767-1 және 0,7 МПа (7 бар) типті электрпневматикалық позицияларға арналған 3725-113, 3730-41, 3730-45, 3730-51, 3730-55, TROVIS 3730-1-113, TROVIS 3730-1-513, TROVIS 3730-3-113, TROVIS 3730-3-513 типті электрпневматикалық позицияларға арналған 3730-3-813 және 1,0 МПа (10 бар) TROVIS 3793-113, TROVIS 3793-1135, TROVIS 3793-513, TROVIS 3793-5135 типті электрпневматикалық позицияларға арналған;

3725-113 типті электрпневматикалық позиционерлер:
- дайындаушының құжаттамасында және пайдалану жөніндегі нұсқаулықта электростатикалық зарял қаупін барынша азайту үшін барлық қажетті ақпарат болуы тиіс. Жабдыққа ескерту жазбасы жазылуы тиіс;

3731-321 және 3731-521 типті электрпневматикалық позиционерлер:
- «Ex db» және «Ex db eb» орындаулары жарылыстан қорғаудың қажетті түрі мен деңгейін және қабықты қорғау дәрежесін қамтамасыз ететін сертификатталған кәбілдік кірмелермен және бітеуіштермен пайдаланылуы тиіс;
- жалпы өнеркәсіптік орындалған кәбілдік кірмелер мен бітеуіштерді пайдалануға тыйым салынады. Кәбілдің кіре берісінде температура 70 °С-тан жоғары болған кезде термотөзімді қосатын кәбілдер пайдаланылуы тиіс. Кәбіл кірмелерінің пайдаланылмайтын тесіктерін бітеуіштермен жабу қажет. 3731-321 және 3731-521 типті позиционерлерді құбырқолдар жүйесіне қосу кезінде позиционерлердің өз корпусындағы тығыздағыш элементтер пайдаланылуы тиіс. 3731-321 және 3731-521 типті позиционерлердің жалғау кәбілдерін тесу механикалық зақымданудан қорғауды ескере отырып жүзеге асырылуы тиіс. Жарылыс өткізбейтін қосылыстар жөнделуге арналмаған.

TROVIS 3730-3-113, TROVIS 3793-113 және TROVIS 3793-1135 типті электрпневматикалық позиционерлер:
- ІІІС шаң тобына жататын орталарда пайдалану кезінде жеткізу жиынтығына кіретін кәбіл кірмелерін, бітеуіштерді және ажыратқыштарды сертификатталғандармен ауыстыру қажет. Кабельдік кірмелер, бітеуіштер және ажыратқыштар сертификатталған температуралар диапазонында пайдалануға жарамды және IP54 төмен емес қорғаныс дәрежесі болуы тиіс.

«Х» белгіленген қолданудың арнайы шарттары ілеспе құжаттамада көрсетілуге тиіс.

Руководитель (уполномоченное лицо) органа по сертификации — (подпись) — Овчинникова Вера Александровна (Ф.И.О.)

Эксперт (эксперт-аудитор) (эксперт/эксперты-аудиторы) — (подпись) — Катальмова Евгения Владимировна (Ф.И.О.)

МП

16 Appendix A (configuration instructions)

16.1 Code list

i *Note*

Values in square brackets [ ] are default settings.

Code	Reading/values	Description
P0	**Status reading with basic information**	The reading indicates the valve position in % when the positioner is initialized. Press ✱ to show the position of the lever in relation to the mid-position (in degrees).
P1	**Reading direction** [1234]/4321	The reading direction of the display is turned by 180°.
P2	**Enable configuration** LOCK/[OPEN]	Enable configuration to change parameter settings. If no settings are entered within five minutes, the initialized positioner automatically changes from OPEN to LOCK.
P3	**Fail-safe position** [ATO]/ATC	Define the fail-safe position of the valve taking the valve type and the actuator's direction of action into account: **ATO** (air to open): the signal pressure opens the valve, e.g. for a fail-close valve. **ATC** (air to close): the signal pressure closes the valve, e.g. for a fail-open valve. ➔ **Positioner needs to be re-initialized after changing the parameter setting.**
P4	**Pin position** [35]	Insert follower pin in the proper position depending on the valve travel/opening angle (see the 'Installation' chapter). Settings: 17/25/[35]/50/70/100/200/300 mm; 90° ➔ **Positioner needs to be re-initialized after changing the parameter setting.**

Code	Reading/values	Description
P5	**Nominal range** [MAX]	The possible adjustment range can be selected in steps of 0.5 mm depending on the selected pin position: ***17*** From 3.5 to 17.5 mm, alternatively ***MAX*** ***25*** From 5.0 to 25.0 mm, alternatively ***MAX*** ***35*** From 7.0 to 35.0 mm, alternatively ***MAX*** ***50*** From 10.0 to 50.0 mm, alternatively ***MAX*** ***70*** From 14.0 to 70.0 mm, alternatively ***MAX*** ***100*** From 20.0 to 100.0 mm, alternatively ***MAX*** ***200*** From 40.0 to 200.0 mm, alternatively ***MAX*** ***300*** From 60.0 to 300.0 mm, alternatively ***MAX*** ***90°:*** 22 to 100°, alternatively MAX (= maximum possible travel), setting in 1° increments ➔ **Positioner needs to be re-initialized after changing the parameter setting.**
P6	**Characteristic** [0] to 8	Characteristic selection (see Chapter 16.2): 0, 1, 2 for globe valves, 0 to 8 with rotary actuators (***P4*** = 90°) 0 Linear 1 Equal percentage 2 Reverse equal percentage 3 Butterfly valve, linear 4 Butterfly valve, equal percentage 5 Rotary plug valve, linear 6 Rotary plug valve, equal percentage 7 Segmented ball valve, linear 8 Segmented ball valve, equal percentage
P7	**Set point** [4-20]/SRLO/SRHI	**4-20**: normal operation with 4 to 20 mA For split-range operation **SRLO**: low range 4 to 11.9 mA **SRHI**: high range 12.1 to 20 mA
P8	**Direction of action w/x** [>>]/<>	Direction of action of the set point w to the valve position x: **>>** (increasing/increasing) or **<>** (increasing/decreasing)
P9	**Gain K_p** 25/[50]/75/100	On initializing the positioner, the gain is set to the selected value. SAMSON recommends the following setting: K_p = 25: 175 cm² actuator area K_p = 50: Actuator size >175 cm² K_p = 75: Actuator size ≥355 cm² K_p = 100: Actuator size ≥1400 cm² If the positioner hunts, the K_p value can be reduced. Alternatively, use a volume restriction.

Code	Reading/values	Description
P10	**Control response** [PID]/PD	The integral action in the control parameters can be deactivated.
P11	**Dead band (integral-action component)** 0.1 to 5.0 % in 0.1 % increments, [AUTO]	In the AUTO setting, the dead band is determined during initialization and adapted during operation, if necessary. No adaptation during operation is made when a fixed value (0.1 to 5.0) is set.
P12	**Pressure limitation** ON/[OFF]	The signal pressure can take on the same pressure as the supply air at the maximum **[OFF]** or, in the case that the maximum actuator force can damage the valve, the pressure is limited to approx. 2.4 bar **[ON].**
P13	**Set point cutoff decrease (end position w <)** [ON]/OFF	Lower tight-closing function: If ***w*** reaches up to 1 % towards the final value that causes the valve to close, the actuator is immediately completely vented (with **ATO**: air to open) or filled with air (with **ATC**: air to close).
P14	**Set point cutoff increase (end position w >)** ON/[OFF]	Upper tight-closing function: If ***w*** reaches up to 99 % towards the final value that causes the valve to open, the actuator is immediately completely filled with air (with **ATO**: air to open) or vented (with **ATC**: air to close).
P15	**Switching mode of software limit contact** [NO.NO]	Switching mode of software limit contact 1 (SLS1) and 2 (SLS2) when activated (when the positioner has been initialized). – Explosion-protected version according to EN 60947-5-6: **NO.NC**: SLS1 Conducting SLS2 Non-conducting **NO.NO**: SLS1 Conducting SLS2 Conducting **NC.NC**: SLS1 Non-conducting SLS2 Non-conducting **NC.NO**: SLS1 Non-conducting SLS2 Conducting – Version without explosion protection: **NO.NC**: SLS1 Conducting SLS2 Non-conducting **NO.NO**: SLS1 Conducting SLS2 Conducting **NC.NC**: SLS1 Non-conducting SLS2 Non-conducting **NC.NO**: SLS1 Non-conducting SLS2 Conducting When the positioner has not been initialized, the signal states of the software limit contacts are the same as in the state of no response. If there is no mA signal at the terminals 11/12, both software limit contacts switch to the non-conducting state.

Code	Reading/values	Description
P16	**Switching threshold of software limit contact 1** –20 to 120 % [2 %]	Software limit 1 is displayed or can be changed in relation to the operating range (steps of 0.5 %). The contact switches to the responded state (Code ***P15***) when the value **falls below** the limit.
P17	**Switching threshold of software limit contact 2** –20 to 120 % [98 %]	Software limit 2 is displayed or can be changed in relation to the operating range (steps of 0.5 %). The contact switches to the responded state (Code ***P15***) when the value **exceeds** the limit.
P18	**Software limit contact test**	Executable test function for the software limit contacts 1 and 2 To start the test, keep ⊛ pressed for 3 s. Select **SLS1** to start the test for software limit contact 1 or **SLS2** software limit contact 2. Press ⊛ to confirm. The selected contact is switched ten times.
P19	**Position transmitter** [>>]/<>	Setting the direction of action of the position transmitter: The direction of action indicates the assignment between travel/ angle position and output signal of the position transmitter based on the CLOSED position. The operating range of the valve is represented by as a 4 to 20 mA current signal. Values exceeding or falling below the limits 2.4 and 21.6 mA can be indicated. If the positioner is not powered (signal <3.8 mA), the output signal is <1.4 mA or 3.8 mA (when the positioner is not initialized).
P20	**Fault indication function** [NO]/HI/LO	The output signal of the position transmitter is issued independently from the valve position and can be set to indicate a fault as follows: **NO**: no signal **HIGH:** Signal = 21.6 ± 0.1 mA **LOW:** Signal = 2.4 ± 0.1 mA
P21	**Position transmitter test** –10.0 to 110.0 %	Executable test function for the position transmitter: Values from –10.0 to +110.0 % (based on the operating range) can be entered in steps of 0.5 %. To start the test, keep ⊛ pressed for 3 s, select the percentage and confirm.
P22	**Reading of set point w**	When the positioner has been initialized: Displays the external set point in 0 to 100 % corresponding to 4 to 20 mA. Press ⊛ to read the internally adjusted set point in the positioner (adjusted set point in 0 to 100 % according to the settings in Code ***P7*** and ***P8***). When the positioner has not been initialized: Displays external set point in 0 to 100 % according to the 4-20 mA signal.

Code	Reading/values	Description
P23	**Start initialization**	Start initialization by pressing ⊛. Press ⊛ to cancel the initialization process. As a result, the valve moves to the fail-safe position when it has not been initialized properly beforehand. If it has been initialized properly, the positioner returns to closed-loop operation using the former parameters. After a power supply failure during initialization, the positioner starts with the values of the last initialization (if available).
P24	**Start zero calibration**	Start zero calibration by pressing ⊛. The zero calibration process can be interrupted by pressing ⊛. The control valve returns to closed-loop operation. After a power supply failure during zero calibration, the positioner starts with the settings from the last zero calibration. **Note:** A zero calibration cannot be started when **E1** error code exists.
P25	**Manual mode**	Turn ⊛ to enter the set point.
P26	**Reset**	Parameters are reset to their default setting. The positioner can only return to closed-loop operation after it has been re-initialized.
P27	**Restart**	The positioner is briefly switched off and on again. Calibration values remain saved. The positioner continues closed-loop operation after a restart.
P28	**Firmware version**	Installed firmware version is displayed. Press ⊛ to display the last four digits of the serial number.

16.2 Valve characteristic selection

The characteristics that can be selected in Code **P6** are shown in the following in graph form.

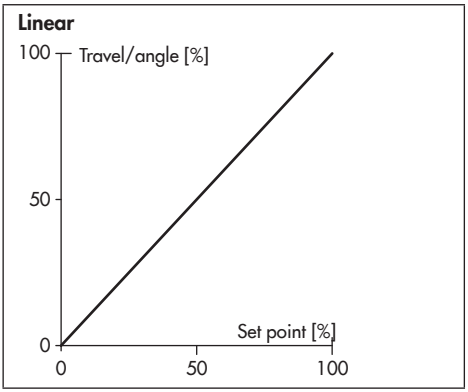

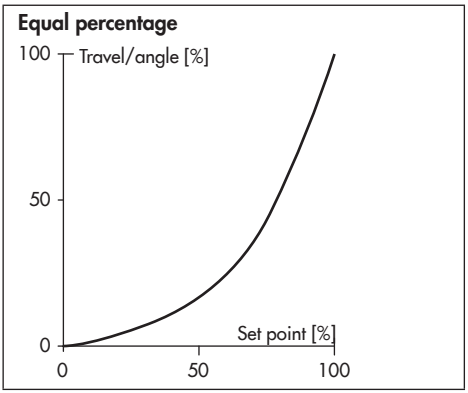

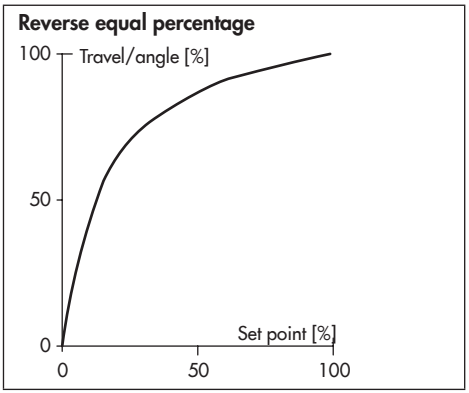

Butterfly valve, linear

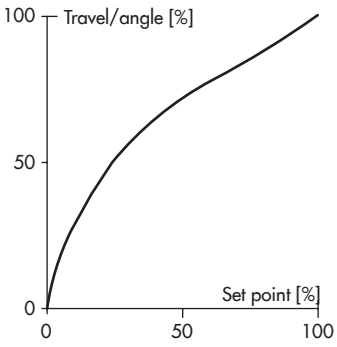

Butterfly valve, equal percentage

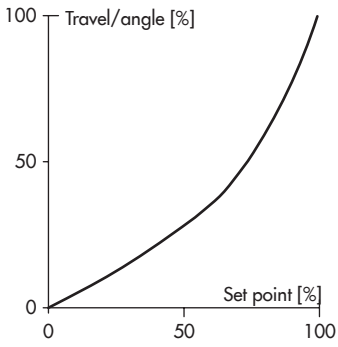

Rotary plug valve, linear

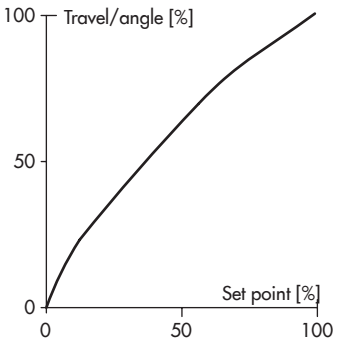

Rotary plug valve, equal percentage

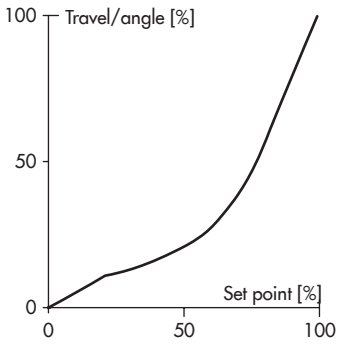

Segmented ball valve, linear

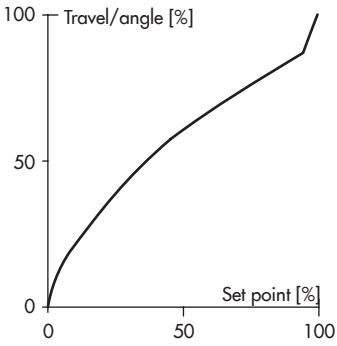

Segmented ball valve, equal percentage

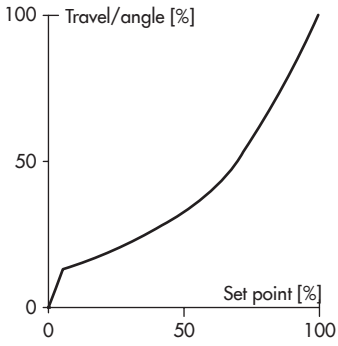

17 Appendix B

17.1 After-sales service

Contact our after-sales service for support concerning service or repair work or when malfunctions or defects arise.

You can reach our after-sales service at aftersalesservice@samsongroup.com.

Addresses of SAMSON AG and its subsidiaries

The addresses of SAMSON AG, its subsidiaries, representatives and service facilities worldwide can be found on our website (www.samsongroup.com) or in all SAMSON product catalogs.

Required specifications

Please submit the following details:

- Order number and position number in the order
- Model number, configuration ID, serial number, firmware version (see the 'Markings on the device' chapter for nameplate details)

EB 8484-1 EN

SAMSON AKTIENGESELLSCHAFT
Weismüllerstraße 3 · 60314 Frankfurt am Main, Germany
Phone: +49 69 4009-0 · Fax: +49 69 4009-1507
samson@samsongroup.com · www.samsongroup.com

2026-10-13 · English